ROWEKO

KUNSTSTOFFVERARBEITUNG

PARTS FOR COMMERCIAL VEHICLES

WHAT MAKES OUR PRODUCTS SPECIAL

Ideas made of plastic

Roweko parts for commercial vehicles stand out thanks to clever details.

Made in Germany

All of our manufacturing is done at our headquarters in Lauffen am Neckar.

High Stability

Our products, made from high-quality HD-PE stand up to high mechanical loads.

Spare Parts

We have an extensive range of spare parts with high availability.

CO^2 sensitive production

We use self-generated, renewable energy for manufacturing.

Durability

Roweko products can be repaired and refurbished.

DIVERSITY IN OUR PRODUCT RANGE AND SERVICE

ROWEKO, headquartered in Lauffen am Neckar, is the specialist for product solutions for plastics. In the sector of commercial vehicles, we are one of the highest-quality national and international suppliers and we are particularly delighted with the increasing demand. Our customers appreciate us as an innovative developer and flexible supplier because our team implements solutions from sample parts and pilot series to mass products. Consistently high quality and with comprehensive service. We consequently manufacture "Made in Germany" in our own, modern and flexible machine pool at the company location in Baden-Wurttemberg. Moreover our highly-trained, experienced team, which supports our quality philosophy with great motivation, ensures the highest product quality.

Numerous customers from varying sectors also appreciate us as a development and manufacturing partner for technical components made of plastic.

Focusing on vacuum forming and bending, we provide comprehensive product engineering – from the idea up to series maturity. We create corresponding vacuum deep drawing molds based on the requirements or customer drawing and select the most suitable material from our large range of thermoplastics.

At the same time, we have all the in-house facilities for processing, such as CNC milling, bonding or welding and we are capable of mounting and supplying complete modules and assemblies. Our many years of experience have made us a highly esteemed partner for discussions involving product development. Just get in touch with us whenever you lack a solution for a product or want to make new products. We are there for you, personally. For 38 years and in the future too.

On behalf of the ROWEKO team
Alexander and Michael Selle

1984

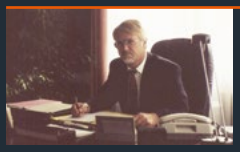

Werner Selle founds the company in Bietigheim-Bissingen

1989

Relocation to Lauffen a.N.
Administration and manufacturing at the new site

1992

Building expansion
Additional 500 m² manufacturing and storage

1995

Expansion of the production facilities
First milling center and new product line of storage boxes

1996

First trade fair presentation
Roweko as an exhibitor at the IAA

1999

Alexander and Michael Selle take over as the next generation of company management

2001

Investment in the machine fleet
Large, new deep-draw machine

2004

New milling center
CNC-controlled 5-axis milling center

2005

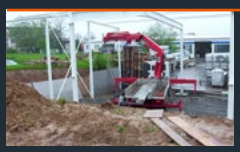

Expansion
The new warehouse arises

2007

New automation
Automatic welder and completely automatic bending machine

2008

New customer contacts to Eastern Europe
First major contract from Russia

2013

Investment in the machine fleet
Tempering furnace

2014

Increase of the production capacity
Third milling center

2016

Investment and modernisation
Two new milling centres

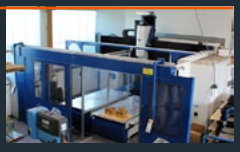

2017

New product developments
Robotic lawn mower garage, small silo

2019

Investment and modernisation
New production facility, two thermoforming machines and a milling machine

2020

Renovation
Outdoor areas

2021

Investment in the machine fleet
Mobile laser

2022

Investment and modernisation
Photovoltaic system

OUR PARTS FOR COMMERCIAL VEHICLES

Tube Containers 6
Hose Tube Containers for silo vehicles 8
Hose Tube Containers for road tankers 18
Transportation tube for roof racks 24
Tube containers for folding signs 26
Tube containers for gauges 27
Transportation tubes for tent poles 28
Transportation tubes for Joloda rollers 29

Storage Boxes / Toolboxes 30
Toolboxes 34
Platform toolbox 58
Platform box 60
Storage Boxes 62

Special Parts for silos 72
Filter mat boxes 74
Coupling cabinet 75
Exhaust air purification 76
Air suction channels 78

Load-securing equipment 80
(Transportation tube for roof racks on page 24)
Load-securing equipment for petrol cans and gas bottles 81
Belt retractor 82
Drum for belts and ratchets 83
Belt tray for ratchets and belts 83
Threaded-rod holder 84

Document boxes 86
Document roll with fixed cover with hinges 87
Document roll with screw cover 89
Document box 90

Further Add-On Parts 92

Spare Parts 96

Small silo 104

Robotic lawnmower garage 106

Sales terms and delivery conditions 114

Subject to technical modifications.
The dimensions and weights specified in the catalogue may vary due to production techniques.

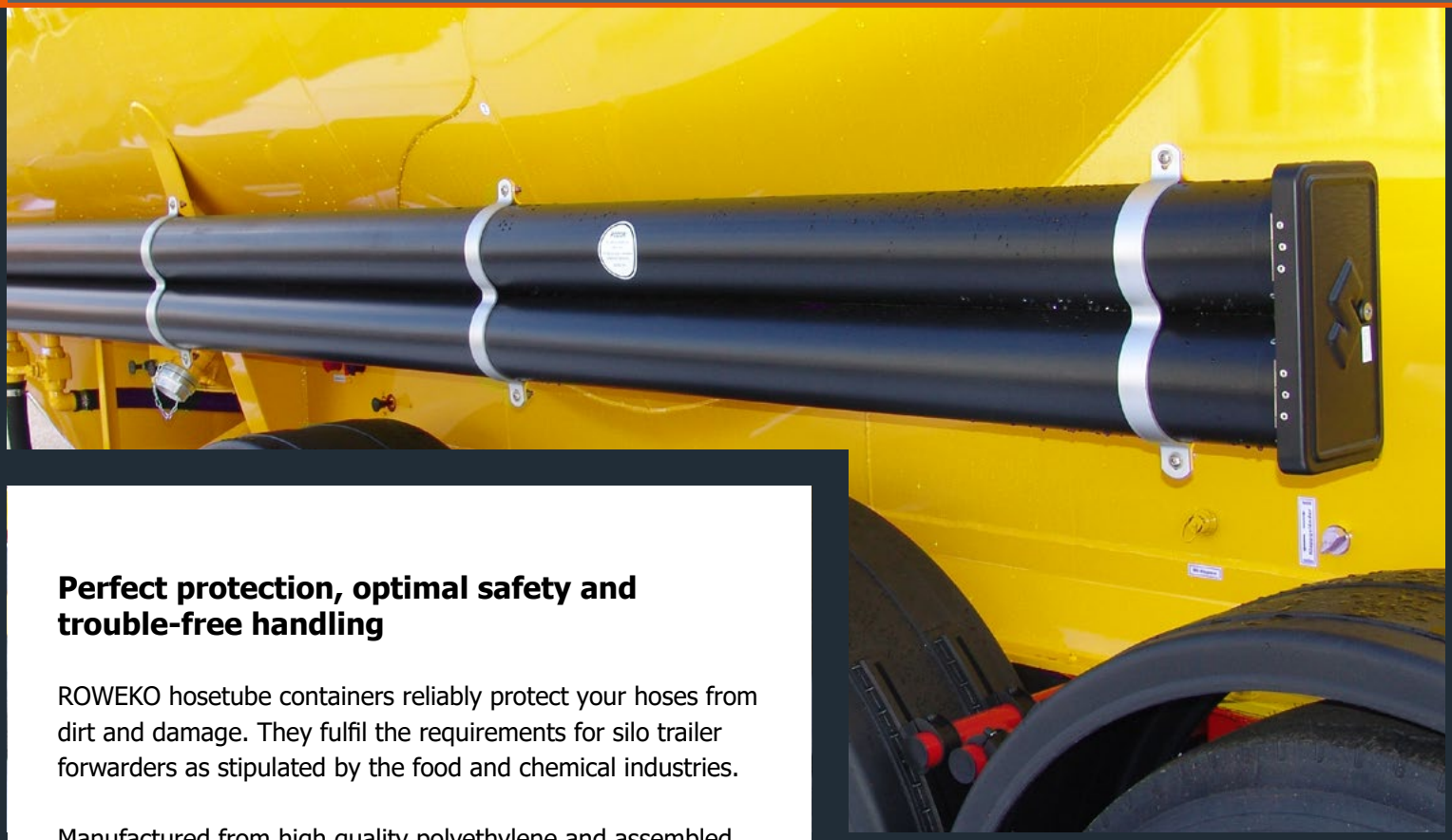

Perfect protection, optimal safety and trouble-free handling

ROWEKO hosetube containers reliably protect your hoses from dirt and damage. They fulfil the requirements for silo trailer forwarders as stipulated by the food and chemical industries.

Manufactured from high quality polyethylene and assembled with rust-resistant mounting parts, the hosetube containers are available in a diverse range of designs. In addition, doors can be mounted on both sides, so that the hoses can be easily removed at narrow loading points. The cleanliness of the couplings can also be monitored more easily, without the hose having to be fully removed from the container.
It is also easier to handle 2 short hoses.

ROWEKO offers a special design with an integrated drip tray for tank vehicles to comply with the regulation, which stipulates that residual contents in the hoses must not drip onto the road.

Custom solutions available upon request

ROWEKO
KUNSTSTOFFVERARBEITUNG

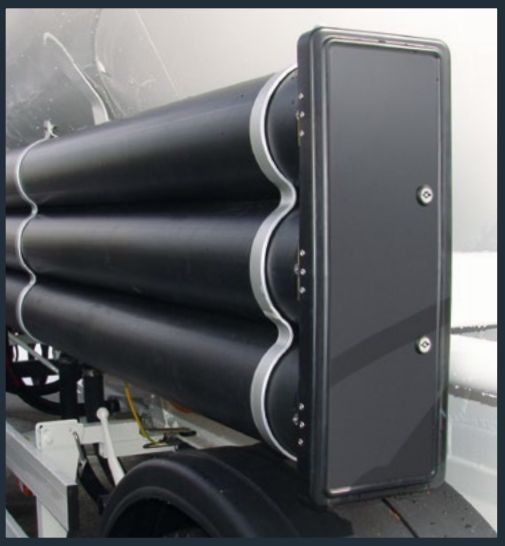

1

Hose tube container, single for silo vehicles

Material
HD-PE black

Execution
End-fitting and flange are fastened with 4 ea. VA rivets to the tube. The flange is riveted from inside to outside (exception: 125 mm). The cover is riveted with a VA hinge to the flange. The cover is locked as standard with a double-bit security rotary bolt. The locking latch grasps behind the aluminum locking bracket.

Scope of delivery
Tube complete with mounted/riveted lid (cover with flange) and end-fitting.
1 two-way key.

Accessories / Options
– Tube support
– Other locking systems (p. 96)
– Door with flange on both sides
– Intermediate lengths are possible for all models (4% surcharge)

1 Cover for Ø 250 mm with rounded corners

A-Ø x wall [mm]	Weight [kg/m]	Length [m]	Art. No.	Price [€]
125 x 3.1	1.23	2.4	**106 24 300**	
		5.0	**106 50 300**	
		6.0	**106 60 300**	
		7.0	**106 70 300**	
160 x 3.9	1.95	2.4	**101 24 300**	
		3.0	**101 30 300**	
		5.0	**101 50 300**	
		6.0	**101 60 300**	
		7.0	**101 70 300**	
		8.0	**101 80 300**	
		10.0	**101 99 300**	
180 x 4.4	2.48	2.4	**102 24 300**	
		3.0	**102 30 300**	
		5.0	**102 50 300**	
		6.0	**102 60 300**	
		7.0	**102 70 300**	
		10.0	**102 99 300**	
200 x 4.9	3.05	2.4	**103 24 300**	
		3.0	**103 30 300**	
		5.0	**103 50 300**	
		6.0	**103 60 300**	
		7.0	**103 70 300**	
		8.0	**103 80 300**	
		10.0	**103 99 300**	
250 x 6.2	4.83	2.4	**104 24 300**	
		5.0	**104 50 300**	
		6.0	**104 60 300**	
		7.0	**104 70 300**	
Intermediate lengths			**125 99 901**	**+4 %**

Hose tube container, single for silo vehicles

1 Clip

3-piece, comprising a stainless steel 1.4301 U bracket (50 x 3 mm), black HD-PE end cap, incl. M10 screw (DIN 603), lock nut and U washer

Accessories

Article for Ø [mm]	Weight [kg]	Art. No.	Price [€]
Clip			
160	0.72	**401 00 001**	
180	0.80	**402 00 001**	
200	0.88	**403 00 001**	
250	1.10	**404 00 001**	
VA screws for mounting on vehicle (set)			
M8 x 20 (2 units)	0.04	**409 00 002**	

Instructions for applying clip

1

2 Chassis bracket – flat

2-piece, comprising a stainless steel 1.4301 tube bracket with clip (35 x 3 mm), black HD-PE base plate with tube contour and bores, without screws

Accessories

Article for Ø [mm]	Weight [kg]	Art. No.	Price [€]
Chassis bracket flat			
160	0.45	**401 00 535**	

2

3 Chassis bracket – round

2-piece, comprising an M10 stainless steel A2 tube bracket with 65 mm thread, incl. lock nut and U washer, black HD-PE base plate with tube contour and bores

Accessories

Article for Ø [mm]	Weight [kg]	Art. No.	Price [€]
Chassis bracket round			
125	0.36	**406 00 575**	
160	0.72	**401 00 575**	
180	0.80	**402 00 575**	
200	0.88	**403 00 575**	
250	1.10	**404 00 575**	

3

Fixing advice

Max. distance betweeen clips 1500 mm
e.g. 5000 mm tube = at least 4 clips

4 Cover and end-fitting

Cover with flange (HD-PE) black, ompletely mounted incl. security rotary bolt and 1 key (standard: two-way), end-fitting separate.
Other locking facilities (p. 96)

Spare parts

Article for Ø [mm]	Weight [kg]	Size [mm]	Art. No.	Price [€]
Door with flange				
125	0.33	150 x 150 x 35	**406 00 302**	
160	0.52	185 x 185 x 35	**401 00 302**	
180	0.58	205 x 205 x 35	**402 00 302**	
200	0.60	225 x 225 x 35	**403 00 302**	
250	0.88	290 x 295 x 35	**404 00 302**	
End cap				
125	0.06		**406 00 005**	
160	0.12		**401 00 005**	
180	0.16		**402 00 005**	
200	0.17		**403 00 005**	
250	0.26		**404 00 005**	
HD-PE tube black, without attachments				
40 - 1000			**On request**	

4

Hose tube container double, for silo vehicles

Material
HD-PE black

Execution
End piece and flange are each attached to the tube container with 8 VA rivets. The flange is riveted from inside to outside. The cover is riveted with two VA hinges to the flange. The cover is locked as standard with a double-bit security rotary bolt (for Ø 250 mm with two security rotary bolts). The locking latch grasps behind the aluminum locking bracket.

Scope of delivery
Tube complete with assembled/riveted lid (cover with flange) and end-fitting.
1 two-way key (for Ø 250 mm with 2 keys).

Accessories / Options
– Tube support
– Other locking systems (p. 96)
– Door with flange on both sides
– Intermediate lengths are possible for all models (4% surcharge)

A-Ø x wall [mm]	Weight [kg/m]	Length [m]	Art. No.	Price [€]
160 x 3.9	3.90	2.4	**110 24 300**	
		3.0	**110 30 300**	
		5.0	**110 50 300**	
		6.0	**110 60 300**	
		7.0	**110 70 300**	
		8.0	**110 80 300**	
		10.0	**110 99 300**	
180 x 4.4	4.96	2.4	**111 24 300**	
		3.0	**111 30 300**	
		5.0	**111 50 300**	
		6.0	**111 60 300**	
		7.0	**111 70 300**	
		10.0	**111 99 300**	
200 x 4.9	6.10	2.4	**112 24 300**	
		3.0	**112 30 300**	
		5.0	**112 50 300**	
		6.0	**112 60 300**	
		7.0	**112 70 300**	
		8.0	**112 80 300**	
		10.0	**112 99 300**	
250 x 6.2	9.66	2.4	**114 24 300**	
		5.0	**114 50 300**	
		6.0	**114 60 300**	
		7.0	**114 70 300**	
Intermediate lengths			**125 99 901**	**+4 %**

1

Custom-made product
On request

2

Hose tube container double, for silo vehicles

1 Clip

Material
Stainless steel 1.4301,
HD-PE black

Instructions for applying clip

Execution
3-piece, comprising:
– Bend return 50/60 x 3 mm, glossy
– Cover plate
– Coach bolt DIN 603, M10 with flat washer and self-locking nut

Fixing advice
Max. distance betweeen clips 1500 mm
e.g. 5000 mm tube = at least 4 clips

2 Door and end cap

Material
HD-PE black

Execution
Fully mounted door with flange, incl. security lock and 1 key (standard: double bit), end cap separate.

Other locking systems (p. 96)

Accessories

Article for Ø [mm]	Weight [kg]	Art. No.	Price [€]
Clip			
160	1.09	**410 00 001**	
180	1.21	**411 00 001**	
200	1.33	**412 00 001**	
250	1.45	**414 00 001**	
VA screws for mounting on vehicle (set)			
M8 x 20 (4 pieces)	0.08	**419 00 002**	

Spare parts

Article for Ø [mm]	Weight [kg]	Size [mm]	Art. No.	Price [€]
Door with flange				
160	0.83	185 x 350 x 35	**410 00 302**	
180	0.96	215 x 385 x 35	**411 00 302**	
200	1.04	230 x 425 x 35	**412 00 302**	
250	1.56	290 x 540 x 35	**414 00 302**	
End cap				
160	0.27		**410 00 005**	
180	0.33		**411 00 005**	
200	0.40		**412 00 005**	
250	0.51		**414 00 005**	
HD-PE tube black, without attachments				
40 - 1000			**On request**	

Hose tube container triple for silo vehicles

Material
HD-PE black

Execution
End piece and flange are each attached to the tube container with 8 VA rivets. The flange is riveted from inside to outside. The cover is riveted with three VA hinges (for Ø 160 mm with two hinges) to the flange. The cover is locked as standard with two double-bit security rotary bolts. The locking latches grasp behind the aluminum locking bracket.

Scope of delivery
Tube complete with assembled/riveted lid (cover with flange) and end-fitting.
2 two-way key.

Accessories / Options
– Tube support
– Other locking systems (p. 96)
– Door with flange on both sides
– Intermediate lengths are possible for all models (4% surcharge)

A-Ø x wall [mm]	Weight [kg/m]	Length [m]	Art. No.	Price [€]
160 x 3.9	5.85	2.4	**120 24 300**	
		3.0	**120 30 300**	
		5.0	**120 50 300**	
		6.0	**120 60 300**	
		7.0	**120 70 300**	
		8.0	**120 80 300**	
		10.0	**120 99 300**	
180 x 4.4	7.44	2.4	**123 24 300**	
		5.0	**123 50 300**	
		6.0	**123 60 300**	
		7.0	**123 70 300**	
		10.0	**123 99 300**	
200 x 4.9	9.15	2.4	**122 24 300**	
		3.0	**122 30 300**	
		5.0	**122 50 300**	
		6.0	**122 60 300**	
		7.0	**122 70 300**	
		8.0	**122 80 300**	
		10.0	**122 99 300**	
Intermediate lengths			**125 99 901**	**+4 %**

1

2

Hose tube container triple for silo vehicles

1 Clip

Material

Stainless steel 1.4301,
HD-PE black

Instructions for applying clip

Execution

3-piece, comprising:
– Bend return 50/60 x 3 mm, glossy
– Cover plate
– Coach bolt DIN 603, M10 with flat washer and self-locking nut

Fixing advice

Max. distance betweeen clips 1500 mm
e.g. 5000 mm tube = at least 4 clips

2 Door and end cap

Material

HD-PE black

Execution

Fully mounted door with flange incl. 2 security locks and 2 keys (standard: double bit), end cap separate.

Other locking systems (p. 96)

Accessories

Article for Ø [mm]	Weight [kg]	Art. No.	Price [€]
Clip			
160	1.45	**420 00 001**	
VA screws for mounting on vehicle (set)			
M8 x 20 (4 pieces)	0.08	**419 00 002**	

Spare parts

Article for Ø [mm]	Weight [kg]	Size [mm]	Art. No.	Price [€]
Door with flange				
160	1.28	185 x 515 x 35	**420 00 302**	
180	1.53	215 x 580 x 35	**423 00 302**	
200	1.64	230 x 640 x 35	**422 00 302**	
200 With rounded corners	1.52	230 x 640 x 35	**422 00 382**	
End cap				
160	0.43		**420 00 005**	
180	0.45		**423 00 005**	
200	0.52		**422 00 005**	
HD-PE tube black, without attachments				
40 - 1000			**On request**	

Compact hose tube container, triple

Material
HD-PE black

Execution
End piece and flange are each attached to the tube container with 9 VA rivets. The flange is riveted from inside to outside. The cover is riveted with two VA hinges to the flange. The cover is locked standard with a double-bit security rotary bolt. The locking latches grasp behind the aluminum locking bracket.

Scope of delivery
Tube complete with assembled/riveted lid (cover with flange) and end-fitting.
1 two-way key.

Accessories / Options
– Other locking systems (p. 96)
– Door with flange on both sides
– Intermediate lengths are possible for all models (4% surcharge)

A-Ø x wall [mm]	Weight [kg/m]	Length [m]	Art. No.	Price [€]
160 x 3.9	5.85	2.4	**121 24 300**	
		3.0	**121 30 300**	
		5.0	**121 50 300**	
		6.0	**121 60 300**	
		7.0	**121 70 300**	
		8.0	**121 80 300**	
		10.0	**121 99 300**	
200 x 4.9	9.15	2.4	**124 24 300**	
		3.0	**124 30 300**	
		5.0	**124 50 300**	
		6.0	**124 60 300**	
		7.0	**124 70 300**	
		8.0	**124 80 300**	
		10.0	**124 99 300**	
Intermediate lengths			**125 99 901**	**+4 %**

1

2

Compact hose tube container, triple

1 Clip

Material
Stainless steel 1.4301, HD-PE black

Execution
3-piece, comprising:
– Tube bracket with clip (50 x 3 mm)
– Base plate with tube contour and bores
– with M8 x 40 galvanised screws (DIN 603), U washer and lock nut

Fixing advice
Max. distance betweeen clips 1500 mm
e.g. 5000 mm tube = at least 4 clips

2 Door with flange and end cap

Material
HD-PE black

Execution
Fully mounted door with flange incl. security lock (double bit) and 1 key.
End cap separate.

Other locking systems (p. 96)

Accessories

Article for Ø [mm]	Weight [kg]	Art. No.	Price [€]
Clip			
160	1.45	**421 00 001**	
200	1.65	**424 00 001**	

Spare parts

Article for Ø [mm]	Weight [kg]	Size [mm]	Art. No.	Price [€]
Door with flange				
160	0.97	350 x 330 x 35	**421 00 302**	
200	1.28	430 x 415 x 40	**424 00 302**	
End cap				
160	0.40		**421 00 005**	
200	0.48		**424 00 005**	
HD-PE tube black, without attachments				
40 - 1000			**On request**	

1

2

Hose tube container, combination, double

Material
HD-PE black

Execution
A-Ø of bottom tube: 200 x 4.9 mm
A-Ø of top tube: 160 x 3.9 mm

End piece and flange are each attached to the tube container with 8 VA rivets. The flange is riveted from inside to outside. The cover is riveted with a VA hinge to the flange. The cover is locked standard with a double-bit security rotary bolt. The locking latches grasp behind the aluminum locking bracket.

Scope of delivery
Tube complete with assembled/riveted lid (cover with flange) and end-fitting, buffer tank, 1 two-way key.

Accessories / Options
– Tube support
– Other locking systems (p. 96)
– Door with flange on both sides
– Intermediate lengths are possible for all models (4% surcharge)

1 Hinge on the side

Article	Weight [kg/m]	Length [m]	Art. No.	Price [€]
Hinge on the side	5.00	2.4	**130 24 301/2**	
		3.0	**130 30 301/2**	
		5.0	**130 50 301/2**	
		6.0	**130 60 301/2**	
		7.0	**130 70 301/2**	
		8.0	**130 80 301/2**	
		10.0	**130 99 301/2**	
Intermediate lengths			**125 99 901**	**+4%**

Hinge on the left (= 1) or right (= 2)

2 Hinge at the bottom

Article	Weight [kg/m]	Length [m]	Art. No.	Price [€]
Hinge at the bottom	5.00	2.4	**131 24 300**	
		3.0	**131 30 300**	
		5.0	**131 50 300**	
		6.0	**131 60 300**	
		7.0	**131 70 300**	
		8.0	**131 80 300**	
		10.0	**131 99 300**	
Intermediate lengths			**125 99 901**	**+4 %**

1

2

Hose tube container, combination, double

1 Clip

Material
Rear bracket (galvanised steel) with welded clip, front bracket (alu blank)

Execution
2-piece with mounting plate, no screws

Attention: not a stock item!
Minimum order volume 4 pc.

Fixing advice
Max. distance betweeen clips 1500 mm
e.g. 5000 mm tube = at least 4 clips

2 Door with flange, end cap, tube

Material
HD-PE black

Execution
Fully mounted door with flange incl. security lock and 1 key (standard: double bit), end cap separate.

Other locking systems (p. 96)

Accessories

Article for Ø [mm]	Weight [kg]	Art. No.	Price [€]
Clip			
200/160	1.43	**430 00 001**	

Spare parts

Article	Weight [kg]	Size [mm]	Art. No.	Price [€]
Door with flange				
Hinge on the left side	0.91	245 x 390 x 35	**430 00 301**	
Hinge on the right side	0.91	245 x 390 x 35	**430 00 302**	
Hinge at the bottom	0.91	245 x 390 x 35	**431 00 302**	
End cap	0.31		**431 00 005**	
HD-PE tube, black				
40 - 1000			**On request**	

Hose tube containers, single, for tanker vehicles

Material
HD-PE black

Execution
End piece and flange are each attached to the tube container with 4 VA rivets. The flange is riveted from inside to outside. The cover is riveted with a VA hinge to the flange and has an EPDM string-type gasket. The buffer tank is pushed into the flange. The cover is locked as standard with a double-bit security rotary bolt. The locking latch grasps behind the aluminum locking bracket.

Scope of delivery
Tube complete with assembled/riveted lid (cover with flange) and end-fitting, buffer tank, 1 two-way key.

Accessories / Options
– Tube support
– Other locking systems (p. 96)
– Intermediate lengths are possible for all models (4% surcharge)

A-Ø x wall [mm]	Weight [kg/m]	Length [m]	Art. No.	Price [€]
160 x 3.9	1.95	2.4	**101 24 371/2**	
		3.0	**101 30 371/2**	
		5.0	**101 50 371/2**	
		6.0	**101 60 371/2**	
		7.0	**101 70 371/2**	
		8.0	**101 80 371/2**	
		10.0	**101 99 371/2**	
180 x 4.4	2.48	2.4	**102 24 371/2**	
		3.0	**102 30 371/2**	
		5.0	**102 50 371/2**	
		6.0	**102 60 371/2**	
		7.0	**102 70 371/2**	
		10.0	**102 99 371/2**	
Intermediate lengths			**125 99 901**	**+4 %**

Hinge on the left (=1) or right (=2)

Instructions for applying clip

1 Clip

2 Chassis bracket round

3 Chassis bracket flat

4

Hose tube containers, single, for tanker vehicles

1 Clip
3-piece, comprising a stainless steel 1.4301 U bracket (50 x 3 mm), black HD-PE end cap, incl. M10 screw (DIN 603), lock nut and U washer

2 Chassis braket – round
2-piece, comprising an M10 stainless steel A2 tube bracket with 65 mm thread, incl. lock nut and U washer, black HD-PE base plate with tube contour and bores

3 Chassis braket – flat
2-piece, comprising a stainless steel 1.4301 tube bracket with clip (35 x 3 mm), black HD-PE base plate with tube contour and bores, without screws

Fixing advice
Max. distance betweeen clips 1500 mm
e.g. 5000 mm tube = at least 4 clips

4 Door and end cap

Material
HD-PE black

Execution
Fully mounted door with flange incl. security lock and 1 key (standard: double bit).
Other locking systems (p. 96)
Collecting tray and end cap separate.

Accessories

Article for Ø [mm]	Weight [kg]	Art. No.	Price [€]
1 Clip			
160	0.72	**401 00 001**	
180	0.80	**402 00 001**	
VA-coach bolts for assembly to the vehicle (set)			
M8 x 20 (2 units)	0.04	**409 00 002**	
2 Chassis braket round			
160	0.72	**401 00 575**	
180	0.80	**402 00 575**	
3 Chassis braket flat			
160	0.45	**401 00 535**	

Spare parts

Article for Ø [mm]	Weight [kg]	Size [mm]	Art. No.	Price [€]
Door with flange (without collecting tray)				
160 Hinge left	0.85	195 x 270 x 95	**401 00 351**	
160 Hinge right	0.85	195 x 270 x 95	**401 00 352**	
180 Hinge left	0.96	220 x 305 x 95	**402 00 351**	
180 Hinge right	0.96	220 x 305 x 95	**402 00 352**	
End cap				
160	0.12		**401 00 005**	
180	0.16		**402 00 005**	
Collecting tray				
160	0.19		**425 31 000**	
180	0.20		**425 32 000**	
HD-PE-tube, black				
40 - 1000			**On request**	

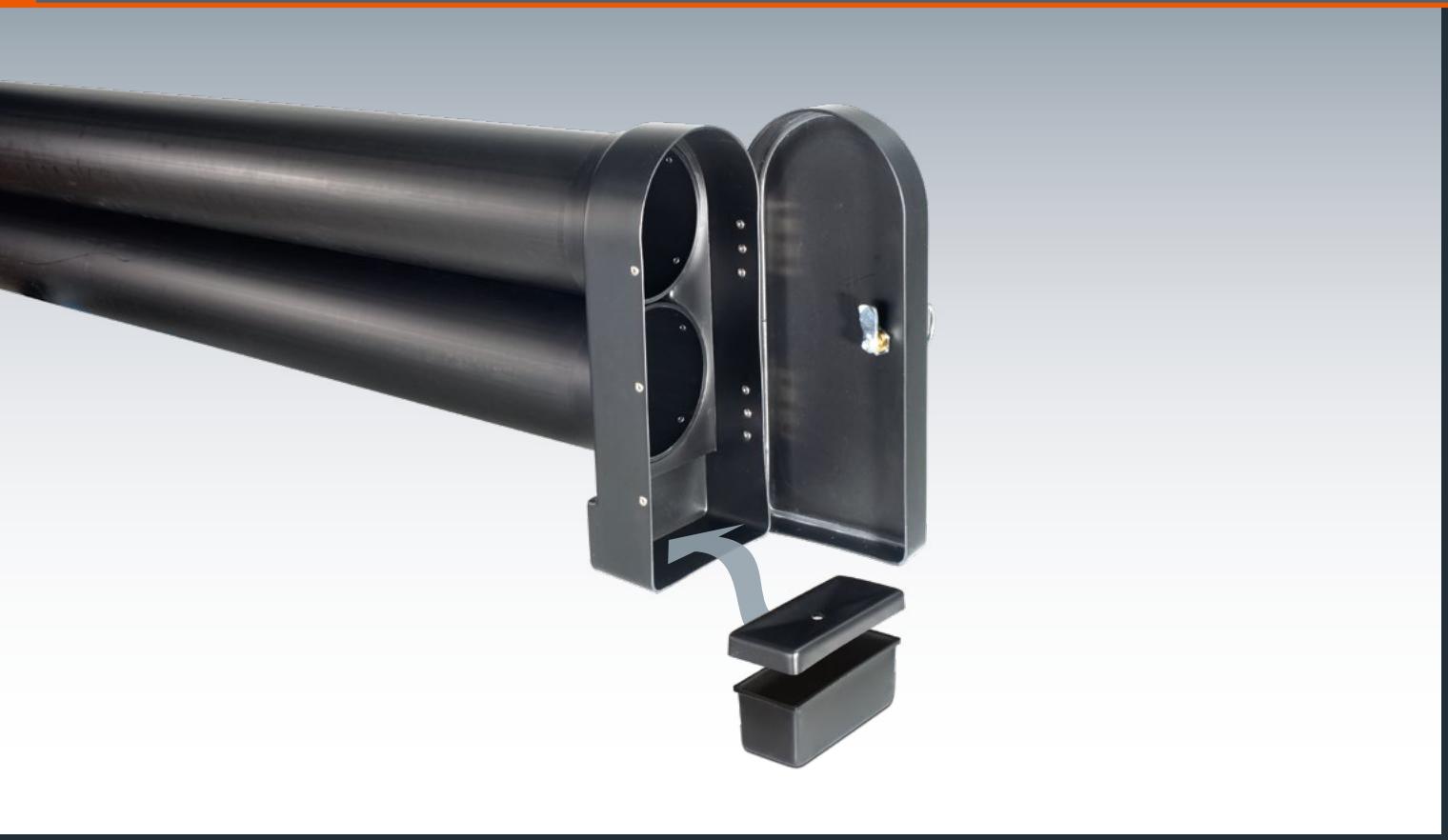

Hose tube containers, double, for tanker vehicles

Material
HD-PE black

Execution
End piece and flange are each attached to the tube container with 8 VA rivets. The flange is riveted from inside to outside. The cover is riveted with a VA hinge to the flange and has an EPDM string-type gasket. The buffer tank is pushed into the flange. The cover is locked as standard with a double-bit security rotary bolt. The locking latch grasps behind the aluminum locking bracket.

Scope of delivery
Tube complete with assembled/riveted lid (cover with flange) and end-fitting, buffer tank, 1 two-way key.

Accessories / Options
– Tube support
– Other locking systems (p. 96)
– Door with flange on both sides
– Intermediate lengths are possible for all models (4% surcharge)

A-Ø x wall [mm]	Weight [kg/m]	Length [m]	Art. No.	Price [€]
160 x 3.9	3.90	2.4	**110 24 371/2**	
		3,0	**110 30 371/2**	
		5,0	**110 50 371/2**	
		6,0	**110 60 371/2**	
		7,0	**110 70 371/2**	
		8,0	**110 80 371/2**	
		10,0	**110 99 371/2**	
180 x 4.4	4.96	2,4	**111 24 371/2**	
		3,0	**111 30 371/2**	
		5,0	**111 50 371/2**	
		6,0	**111 60 371/2**	
		7,0	**111 70 371/2**	
		10,0	**111 99 371/2**	
Intermediate lengths			**125 99 901**	**+4 %**

Hinge on the left (=1) or right (=2)

1

2

Hose tube containers, double, for tanker vehicles

1 Clip

Material
Stainless steel 1.4301,
HD-PE black

Instructions for applying clip

Execution
3-piece, comprising:
– Bend return 50/60 x 3 mm, glossy
– Cover plate
– Coach bolt DIN 603, M10 with flat washer and self-locking nut

Fixing advice
Max. distance betweeen clips 1500 mm
e.g. 5000 mm tube = at least 4 clips

2 Door and end cap

Material
HD-PE black

Execution
Fully mounted door with flange incl. security lock and 1 key (standard: double bit).

Other locking systems (p. 96)

Collecting tray and end cap separate.

Accessories

Article for Ø [mm]	Weight [kg]	Art. No.	Price [€]
Clip			
160	1.09	**410 00 001**	
180	1.21	**411 00 001**	
VA-coach bolts for assembly to the vehicle (set)			
M8 x 20 mm (4 units)	0.08	**419 00 002**	

Spare parts

Article for Ø [mm]	Weight [kg]	Size [mm]	Art. No.	Price [€]
Door with flange (without collecting tray)				
160 Hinge left	1.22	195 x 440 x 95	**410 00 351**	
160 Hinge right	1.22	195 x 440 x 95	**410 00 352**	
180 Hinge left	1.50	220 x 490 x 95	**411 00 351**	
180 Hinge right	1.50	220 x 490 x 95	**411 00 352**	
End cap				
160	0.27		**410 00 005**	
180	0.33		**411 00 005**	
Collecting tray				
160	0.19		**425 31 000**	
180	0.20		**425 32 000**	
HD-PE tube, black				
40 - 1000			**On request**	

ROWEKO
KUNSTSTOFFVERARBEITUNG

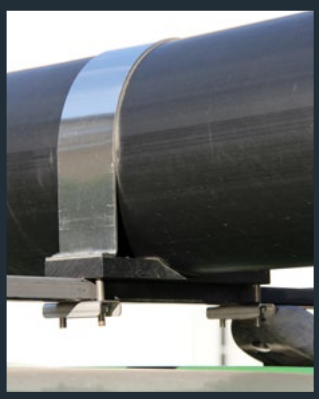

Transportation tube for roof rack

How long do you need to securely tie tubes or similar long goods onto your roof rack? How certain are you that you don't lose anything during your journey to your customers?

The transport tube from ROWEKO is sure to be of help to you. Tested in accordance with VDI guideline 2700 and the European standard EN 12195, the tube is suitable for securing loads. Once you have it securely mounted to your roof rack, you will be able to stow away your long goods up to a length of 6,000 mm quickly and securely. This means that your goods enjoy the best possible protection against the elements, theft or damage.

Designs

We manufacture your transport tube from black plastic polyethylene (HD-PE) in four different diameters (125 / 160 / 200 / 250 mm) and to the length that you want (up to 6,100 mm). The front side is sealed securely with an end piece, the side mounted in the direction of the rear of the vehicle has a door for opening. A lock (standard: a double-bit turn-bolt lock) prevents unauthorised opening.

Accessories

ROWEKO provides the perfect complimentary accessory upon request with a retriever sleeve. This allows you to pull out any shorter-length goods from the back of the long tube if they should slide to the front during transport.

For a better overview, in the case of tube diameters of 200 mm and a length of 3,100 mm, a partition of the storage space with three tubes, each with a diameter of 90 mm, can be inserted. This would allow you, for example, to sort the parts you require in advance, and insert them in accordance with the order you will visit your customers.

Two varieties of fastening clips round off the entire transport tube concept. Roof-rack profiles up to a width of 70 mm and a height of 50 mm are universally covered. The use of stainless steel and plastic to produce the tubes ensures a long service life, even under extreme conditions.

Experience the "Made in Germany" quality for yourself.

www.transportrohr.de

1

2

Transportation tube for roof rack

Material
HD-PE black

Execution
Flange and end cap fixed to tube with stainless steel rivets. The flange is riveted from the inside to the outside. The flange has a reinforced closing angle. The lid has a Roweko logo (lasered) and is riveted to the flange with a VA hinge. This is sealed with a security rotary bolt (standard: double bit). The closing tab is longer.
2 plastic keys are included.

Accessories / Options
– Fastening clip
– Other locking systems (p. 96)
– Intermediate lengths are possible for all models (4% surcharge)

1 Curved end cap
2 Door with Roweko logo (lasered)

A-Ø x wall [mm]	Weight [kg/m]	Size [m]	Art. No.	Price [€]
125 x 3.1	1.23	2.1	**106 20 385**	
		3.1	**106 30 385**	
		4.1	**106 40 385**	
		5.1	**106 50 385**	
		6.1	**106 60 385**	
160 x 3.9	1.95	2.1	**101 20 385**	
		3.1	**101 30 385**	
		4.1	**101 40 385**	
		5.1	**101 50 385**	
		6.1	**101 60 385**	
200 x 4.9	3.05	2.1	**103 20 385**	
		3.1	**103 30 385**	
		4.1	**103 40 385**	
		5.1	**103 50 385**	
		6.1	**103 60 385**	
250 x 6.2	4.83	2.1	**104 20 385**	
		3.1	**104 30 385**	
		4.1	**104 40 385**	
		5.1	**104 50 385**	
		6.1	**104 60 385**	
Intermediate lengths			**125 99 901**	**+4 %**

Approved according to VDI Directive 2700 and European Standard EN 12195

GTÜ certificate

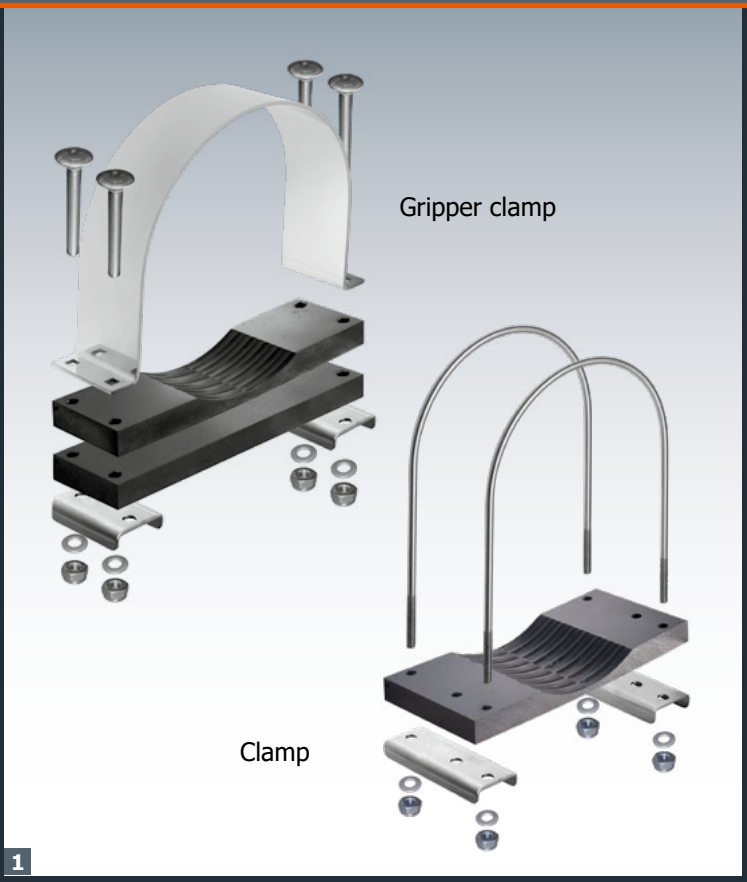

1

2

3

Transportation tube for roof rack

1 Fastening clip

Material
HD-PE black, Stainless steel

Execution
Gripper clamp
3-piece, consisting of: 1 x elbow with plates, 1 x tube carrier plate, 2 x U-clamping profile, M8 x 70 mm screw set (suitable for carrier profile of max. 35 x 25 mm).

Clamp
3-piece, consisting of: 2 x M10 round bracket incl. washer + nut, 1 x tube carrier plate, 2 x U-clamping profile (suitable for carrier profile of max. 45/70 x 50 mm).

Fixing advice
Max. distance betweeen clips 1500 mm
e.g. 5000 mm tube = at least 4 clips

Spare parts: On request

Instructions for applying clamp

Instructions for applying gripper clamp

Accessories

Article for Ø [mm]	Weight [kg]	Size [mm]	Art. No.	Price [€]
Gripper Clamp				
160	1.20		**401 00 185**	
200	1.40		**403 00 185**	
250	1.60		**404 00 185**	
Clamp				
125	1.00		**406 00 175**	
160	1.15		**401 00 175**	
200	1.33		**403 00 175**	
250	1.40		**404 00 175**	
Tubes in tube system				
200 (to 3.10 m)	1.95/m	90 / 90 / 90	**103 30 086**	
Retriever sleeve				
125	0.20		**406 00 085**	
160	0.25		**401 00 085**	
200	0.35		**403 00 085**	
250	0,45		**404 00 085**	
Belt (for excess lengths over 3.1 m)			**409 00 086**	

2 Tube in tube system (only for Ø 200 mm tube)

Material
HD-PE black

Execution
3 pipes are inserted into the transportation tube for partitioning purposes. Their lengths are adapted in line with the transportation tube (max. possible length of 3,100 mm).

3 Retriever sleeve

Material
HD-PE black

Execution
Plastic tube (length of 100 mm), open on one side, for returning short goods. The belt is riveted onto the flange and the belt length is adapted in line with the transportation tube (standard length of 3.3 m).

1

Tube containers for folding signs

Size
Tube container with A-Ø 90 mm is suitable for folding signs with side lengths of 600 mm + 700 mm Tube container with A-Ø 110 mm is suitable for folding signs with side lengths of 700 mm, 900 mm + 1100 mm

Material
HD-PE black

Execution
With welded screw cap and retaining cable (A2) to secure the lid. End piece welded and riveted 3 times.

1 Tube clip
– 15 mm thick made from HD-PE, black
– CNC milled incl. clamping screw in single, double or triple design

A-Ø x wall [mm]	Weight [kg]	Tube length [mm]	Art. No.	Price [€]
90 x 2.2	0.9	800	**190 90 080**	
90 x 2.2	1.0	900	**190 90 090**	
110 x 3.4	1.6	900	**191 10 090**	
110 x 3.4	1.9	1200	**191 10 120**	
110 x 3.4	2.1	1350	**191 10 135**	

Other lengths available upon request.

Accessories

Article	Weight [kg]	Hole spacing [mm]	Art. No.	Price [€]
Tube clip for Ø 90				
single	0.1	140	**461 08 090**	
double	0.2	260	**461 09 090**	
triple	0.31	390	**461 10 090**	
Tube clip for Ø 110				
single	0.11	155	**461 08 110**	
double	0.22	305	**461 09 110**	
triple	0.4	454	**461 10 110**	

Tube containers for gauges

Size
Tube: Ø 125 mm, Thickness: 3,1 mm
End cap: 150 x 150 x 33 mm

Material
HD-PE black

Execution
The lid with flange and the end piece with tube are welded from the outside. The tube is slotted for use of a latch. The locking lever is not lockable.
2 triangular loops are riveted to the flange and end piece in a triangular form so that a shoulder strap (not included in the scope of delivery) can be attached.

1 Handle

Material
HD-PE black, welded to the middle of the tube

A-Ø x wall [mm]	Weight [kg]	Tube length [mm]	Art. No.	Price [€]
125 x 3.1	2.5	1600	**191 25 160**	

Other Ø and lengths available upon request.

Accessories

Article	Weight [kg]	Art. No.	Price [€]
Handle for tube container	0.03	**419 90 001**	

1

Transportation tubes for tent poles

Material
HD-PE black

Execution
The lid with flange and the domed end piece are riveted to the tube and additionally welded. 2 security rotary bolts ensure secure closure (4 PA keys included).
In order to retrieve even short poles from the tube easily, the tube container has a retrieval disc on the strap.

1 Gripper clamp
3-piece, comprising a stainless steel 1.4301 elbow with plates (70 x 3 mm), black HD-PE base plate with tube contour and bores

A-Ø x wall [mm]	Weight [kg]	Tube length [mm]	Art. No.	Price [€]
160 x 3,9	4.8	1800	**101 18 388**	
200 x 4,9	7.2	1800	**103 18 388**	
250 x 6,2	10.5	1800	**104 18 388**	

Other lengths available upon request.

Accessories

Article	Weight [kg]	Art. No.	Price [€]
Gripper clamp			
for Ø 160	0.89	**401 06 185**	
for Ø 200	1.11	**403 06 185**	
for Ø 250	1.37	**404 06 185**	
20 mm spacer plate (increases the distance from the side)			
for Ø 160	0.29	**401 99 188**	
for Ø 200	0.34	**403 99 188**	
for Ø 250	0.41	**404 99 188**	

1

Transportation tubes for Joloda rollers

Material
HD-PE black

Execution
Flange and end piece attached to the tube with VA rivets. The flange is riveted from inside to outside. The flange has a reinforced closing angle. The lid has a Roweko logo (lasered) and is riveted to the flange with a VA hinge. This is sealed with a security rotary bolt (standard: double bit). The latch is extended. 2 plastic keys are supplied.

1 Chassis braket – round
2-piece, comprising an M10 stainless steel A2 tube bracket with 65 mm thread, incl. lock nut and U washer, black HD-PE base plate with tube contour and bores

A-Ø x wall [mm])	Weight [kg]	Tube length [mm]	Art. No.	Price [€]
125 x 3,1	2.3	1500	**106 15 385**	
160 x 3,9	3.8	1500	**101 15 385**	

Other Ø and lengths available upon request.

Accessories

Article for Ø [mm]	Weight [kg]	Art. No.	Price [€]
Chassis braket – round			
125	0.36	**406 00 575**	
160	0.72	**401 00 575**	
Dust cap for lock	0.01	**413 00 012**	

Storage boxes / Toolboxes

As diverse as their use

Available in many different sizes, with 4 different locking mechanisms. Whether small, such as type 13 or 18 and suitable for vans, or large, like type 8 or 17 and suitable for semi-trailers; we offer a toolbox to suit almost every type of commercial vehicle. Naturally in reknowned ROWEKO quality.

Needless to say, all ROWEKO toolboxes have been officially approved for use as under-ride side guards on transport vehicles in line with EEC Directive 89/297 and the international regulation ECE-R73.

Useful accessories complete the product range. Draws ensure that the contents of the boxes are kept in good order, whilst the mounting allows the toolbox to be easily mounted within the vehicle.

All parts of ROWEKO toolboxes are available as spare parts, as they are „Made in Germany".

E1
ECE-R73

TÜV-ECE-R73

TÜV SÜD
TÜV Automotive GmbH

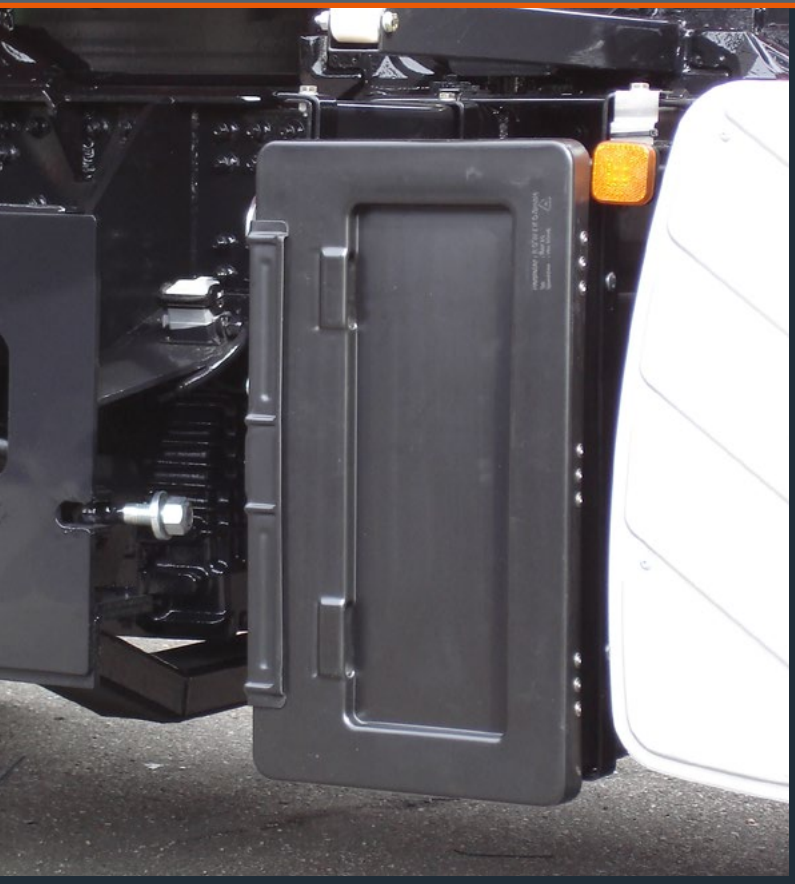

2-point locking
Simple and proven locking mechanism.

The locking bolts of the two identical locks grip the back of an aluminium rail. An additional stainless steel stamping prevents the locking cylinder from being over-stressed. Protective covers made from black PE protect the locks from the elements.

3-point locking
User-friendly locking mechanism.

The toolbox is locked via a central lock with guide-bars, which simultaneously grip an aluminium rail mounted on three sides.

Solid holders operate the guide-bars. The new, enlarged lock cover protects the lock from the elements, and the wing knob from being opened by vibrations. Integrated recessed grips make it easier to open and close the cover.

Snap lock
Economy closure.

A HD-PE profile, secured on the cover with VA rivets, provides a snap-fit over the projecting rim of the toolbox. The spring-pin (included) provides additional security. A padlock (available as an accessory) prevents unautho-rised access. For technical reasons this economical alternative is only suitable for use with certain types of toolboxes.

Circlip lock
Individual locking facility.

A plastic (HD-PE) mould serves as the lock. This hoop is secured to the box with VA hinges. The hoop fits over the closed cover and locks. A spring-pin is included. If required, a padlock (available as an accessory) can also be used. Integrated recessed grips make it easier to open and close the cover.

Under-ride side guards

E1

ECE-R73

Since January 1994, all ROWEKO toolboxes have been type-approved by the Federal Motor Transport Authority (approval no. 90442). This permits their unrestricted use as under-ride side guards in accordance with EEC Directive 89/297. All the required tests have been carried out and certified under the supervision of the German technical inspection agency, south-western division (TÜV Südwest). Furthermore, all ROWEKO toolboxes meet the specifications in the international rule ECE-R73. All required information can be found on the cover in line with regulations.

Lock cover

ROWEKO ensures a long life with its specially designed lock cover featuring:
- UV-resistant material
- Secure fastening through tight fit
- High stability of the mounting aperture
- Long-lasting flexibility through integral hinges

Watertightness

ROWEKO toolboxes are produced with the vacuum moulding method. Bodies and covers are moulded separately on two machines. The two parts are then shrunk to form a tight unit.
For you, this means:
- Splash-proofing without the need for an additional rubber seal
- The use of one type of plastic makes it easier to recycle
- Ice and snow in wintertime will not cause the box and cover to become „glued together".

Corrosion-resistant mounting parts

ROWEKO uses only high-quality materials for mounting its toolboxes. Long life is guaranteed through:
- Hinges and rivets made from corrosion-proof V2A steel
- Aluminium push-fit brackets
- Locks made of brass and zinc die, Polyamid or stainless steel
- Securing hoops and snap locks made from polyethylene (HD-PE)
- Padlock shackles made from stainless V2A steel

Weight

The best possible volume-to-weight ratio is achieved by the use of the economical vacuum moulding method. In comparison to other production methods, great wall thicknesses are not required to achieve maximum stability. And maximum stability is achieved; it is certified by the German technical inspection agency.

Storage space

The entire interior capacity of ROWEKO toolboxes can be utilised as storage space. Drawers and inserts allow the space to be subdivided to suit individual requirements, as well as keeping order and giving the user an overview of the box contents. The wide range of types available means that there is a toolbox to suit every type of truck.

Cleaning

The interior of ROWEKO toolboxes can be easily cleaned with a steam blaster, as the complete drainage of cleaning agents is guaranteed. Lashing straps and tools remain out of the water and functional. Thus no pools of water form, which can cause to hinges breaking when there is a frost.

Mounts

The flat steel mounts (in stronger material) are bent from a sheet that matches the box in question. The mount fully encapsulates the box. The front and rear clamps only need to be affixed with screws in the premarked holes on the box. All parts required for the mount are included to allow for a quick assembly.

Comfort
- Integrated recessed grips make it easier to open and close the cover (not available with all types of locks)
- Safely rounded aluminium closing angles
- Wing knob
- Your company logo can be easily incorporated onto the cover, thus the toolbox also functions as an effective marketing tool.
- All of our products are „Made in Germany", meaning that all components are subjected to a comprehensive spare part guarantee.

Type approval

VA rivets

Chain catch

Storage space – fully accessible

Rounded closing angle

Wing knob

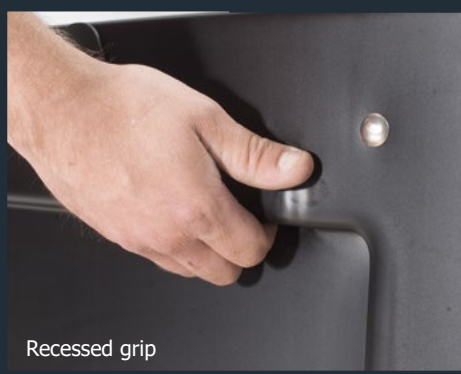
Recessed grip

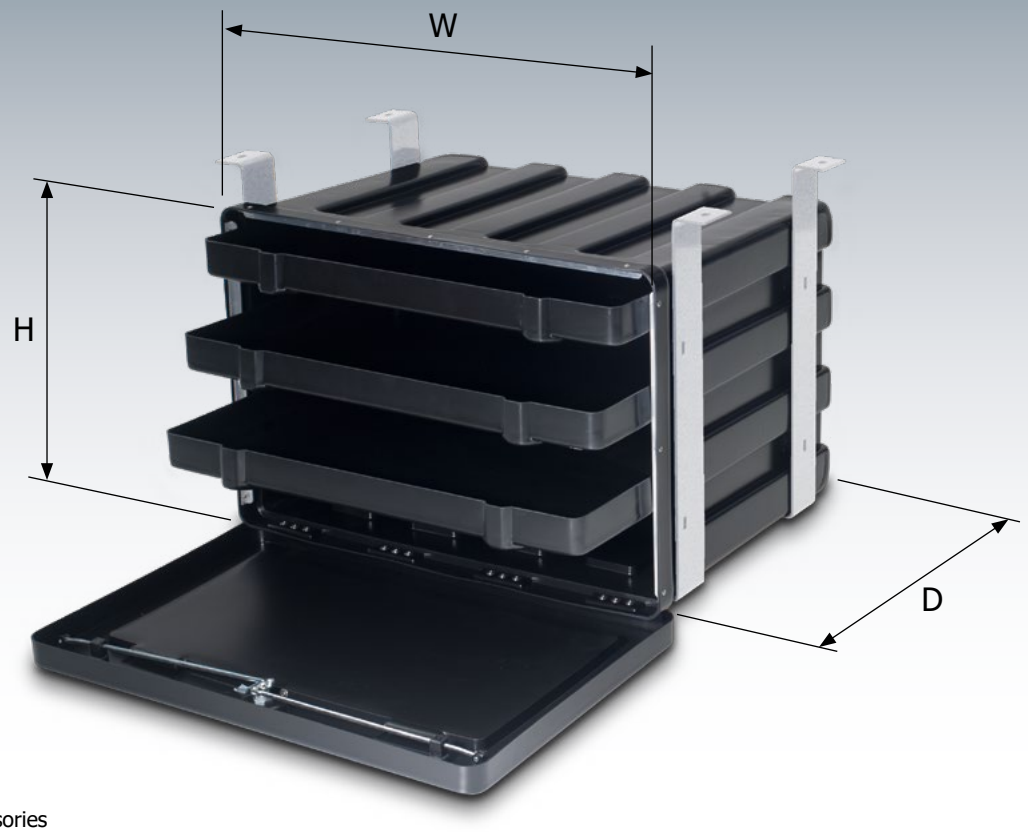

Image: Type 8 with accessories

Type	Width [mm]	Depth [mm]	Height [mm]	Page in catalogue
1	600	500	460	34
1-V	460	500	600	35
2	650	600	350	36
2-V	350	600	650	37
3	600	450	460	38
4	640	440/600	450/180	39
6	630	600	545	40
6-H	630	600	545	41
7	545	600	630	42
8	820	600	540	43
9	650	610	400	44
10	920	470	510	45
13	650	330	350	46
13-S	650	300	350	47
15	650	440	350	48
16	650	430	400	49
17	1200	550	630	50
18	480	410	440	51
18-V	440	410	480	52
20	720	310	280	53
28	845	340	465	54
29	560	360	430	56

The dimensions given are external dimensions without accessories. There may be slight variations in the finished product.

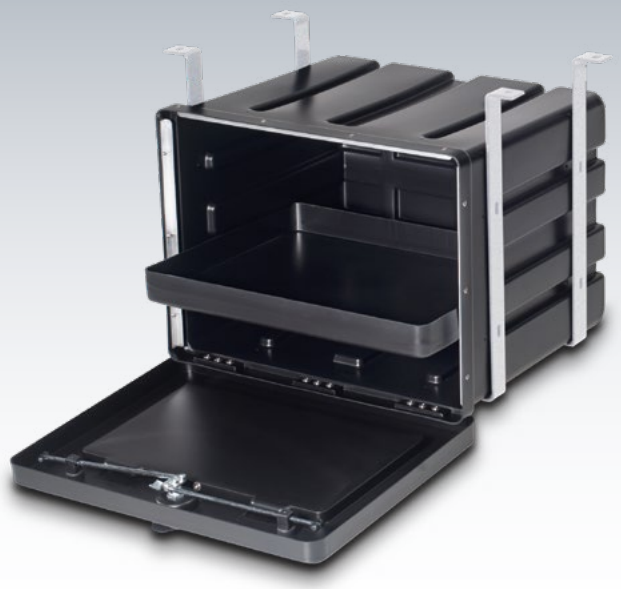

1

2

Image: 3-point lock with accessories

Type 1 toolbox

Size (width x depth x height)
600 x 500 x 460 mm

Material
HD-PE black

Weight
5.20 kg – 5.50 kg

Execution
The lid (choice of lock) is riveted to the box with 3 hinges. The hinges and rivets are made from stainless steel (V2A) and the closing angles are made from aluminium. The lock of the 3-point locking system is protected from the elements by means of a cap.

Attention: locking bow lock system is not a stock item! Minimum order volume 10 pc.

Locking system as per description on page 31

Article	Art. No.	Price [€]
3-point lock		
With double bit security lock	**201 30 300**	
With wing knob	**201 30 410**	
Circlip lock		
With locking split pin	**201 40 000**	
With padlock	**201 40 600**	

Accessoires

Article	Weight [kg]	Art. No.	Price [€]
Mounting (pair) Flat steel, 40 x 5 mm, galvanized, incl. screws	5.80	**401 20 030**	
Drawer PS, black 563 x 433 x 55 mm	1.30	**401 20 020**	
Fitting of mounting to the toolbox		**499 20 035**	
Unhingeable chains For limiting the lid opening to max. 90°		**499 20 001**	

1 Mounting
2 Drawer

Installation instructions for mounting

Image: 3-point lock with accessories

1

2

Type 1-V toolbox

Size (width x depth x height)
460 x 500 x 600 mm

Material
HD-PE black

Weight
5.50 kg

Execution
The lid is riveted to the box with 3 hinges. The hinges and rivets are made from stainless steel (V2A) and the closing angles are made from aluminium.
The lock is protected from the elements with a cap. The hinges can be on the left or right side.

Locking system as per description on page 31

Article	Art. No.	Price [€]
3-point lock		
With double bit security lock	**201 30 300**	
With wing knob	**201 30 410**	

Accessoires

Article	Weight [kg]	Art. No.	Price [€]
Mounting (pair) Flat steel, 40 x 5 mm, galvanized, incl. screws	6.00	**401 20 035**	
Drawer PS, black 415 x 455 x 70 mm	1.10	**410 20 020**	
Fitting of mounting to the toolbox		**499 20 035**	

1 Mounting
2 Drawer

Installation instructions for mounting

1

2

Image: 3-point lock with accessories

Type 2 toolbox

Size (width x depth x height)
650 x 600 x 350 mm

Material
HD-PE black

Weight
5.60 kg - 5.90 kg

Execution
The lid is riveted to the box with 3 hinges. The hinges and rivets are made from stainless steel (V2A) and the closing angles are made from aluminium.
The lock of the 3-point locking system is protected from the elements by means of a cap.

Locking system as per description on page 31

Article	Art. No.	Price [€]
3-point lock		
With double bit security lock	**202 30 300**	
With wing knob	**202 30 410**	
Circlip lock		
With locking split pin	**202 40 000**	
With padlock	**202 40 600**	

Accessoires

Article	Weight [kg]	Art. No.	Price [€]
Mounting (pair) Flat steel 40 x 5 mm, galvanized, incl. screws	5.00	**402 20 030**	
Drawer PS, black 600 x 545 x 70 mm	1.80	**402 20 020**	
Fitting of mounting to the toolbox		**499 20 035**	
Unhingeable chains For limiting the lid opening to max. 90°		**499 20 001**	

1 Mounting
2 Drawer

Installation instructions for mounting

Image: 3-point lock with accessories

1

Type 2-V toolbox

Size (width x depth x height)
350 x 600 x 650 mm

Material
HD-PE black

Weight
5.90 kg

Execution
The lid is riveted to the box with 3 hinges. The hinges and rivets are made from stainless steel (V2A) and the closing angles are made from aluminium.
The lock is protected from the elements with a cap. The hinges can be on the left or right side.

Locking system as per description on page 31

Article	Art. No.	Price [€]
3-point lock		
With double bit security lock	**202 30 300**	
With wing knob	**202 30 410**	

Accessoires

Article	Weight [kg]	Art. No.	Price [€]
Mounting (pair) Flat steel, 40 x 5 mm, galvanized, incl. screws	6.00	**402 20 035**	
Fitting of mounting to the toolbox		**499 20 035**	

1 Mounting

Installation instructions for mounting

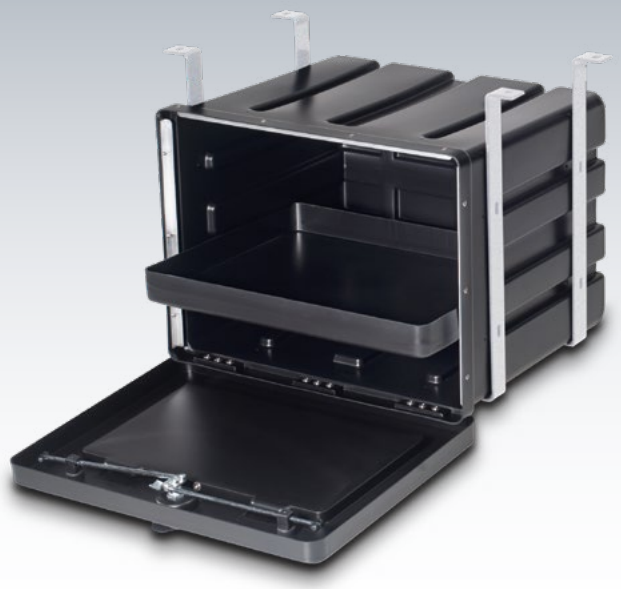

1

2

Image: 3-point lock with accessories

Type 3 toolbox

Size (width x depth x height)
600 x 450 x 460 mm

Material
HD-PE black

Weight
5.20 kg

Execution
The lid is riveted to the box with 3 hinges. The hinges and rivets are made from stainless steel (V2A) and the closing angles are made from aluminium.
The lock is protected from the elements with a cap.

Locking system as per description on page 31

Article	Art. No.	Price [€]
3-point lock		
With double bit security lock	**202 30 300**	
With wing knob	**202 30 410**	

Accessoires

Article	Weight [kg]	Art. No.	Price [€]
Mounting (pair) Flat steel, 40 x 5 mm, galvanized, incl. screws	5.80	**401 20 030**	
Drawer PS, black 563 x 383 x 55 mm	1.30	**403 20 020**	
Fitting of mounting to the toolbox		**499 20 035**	
Unhingeable chains For limiting the lid opening to max. 90°		**499 20 001**	

1 Mounting
2 Drawer

Installation instructions for mounting

Image: 3-point lock with accessories

1

2

Type 4 toolbox

Size (width x depth x height)
640 x 440 x 450 mm (top)
640 x 600 x 180 mm (bottom)

Material
HD-PE black

Weight
6.70 kg

Execution
The lid is riveted to the box with 3 hinges. The hinges and rivets are made from stainless steel (V2A) and the closing angles are made from aluminium.
The lock is protected from the elements with a cap.

Attention: Not a stock item! Minimum order volume 10 pc.

Locking system as per description on page 31

Article	Art. No.	Price [€]
3-point lock		
With double bit security lock	**204 30 300**	
With wing knob	**204 30 410**	

Accessories

Article	Weight [kg]	Art. No.	Price [€]
Mounting (pair) Flat steel 40 x 5 mm, galvanized, incl. screws	5.70	**404 20 030**	
Drawer PS, black 592 x 395 x 47 mm	1.20	**404 20 020**	
Fitting of mounting to the toolbox		**499 20 035**	
Unhingeable chains For limiting the lid opening to max. 90°		**499 20 001**	

1 Mounting
2 Drawer

Installation instructions for mounting

1

2

Image: Circlip lock with accessories

Type 6 toolbox

Size (width x depth x height)
630 x 600 x 545 mm

Material
HD-PE black

Weight
7.40 kg - 7.90 kg

Execution
The lid is riveted to the box with 3 hinges. The hinges and rivets are made from stainless steel (V2A) and the closing angles are made from aluminium.
The lock of the 3-point locking system is protected from the elements by means of a cap.

Locking system as per description on page 31

Article	Art. No.	Price [€]
3-point lock		
With double bit security lock	**206 30 300**	
With wing knob	**206 30 410**	
Circlip lock		
With locking split pin	**206 40 000**	
With padlock	**206 40 600**	

Accessories

Article	Weight [kg]	Art. No.	Price [€]
Mounting (pair) Flat steel 40 x 5 mm, galvanized, incl. screws	6.40	**406 20 030**	
Drawer PS, black 585 x 500 x 58 mm	1.60	**406 20 020**	
Fitting of mounting to the toolbox		**499 20 035**	
Unhingeable chains For limiting the lid opening to max. 90º		**499 20 001**	

1 Mounting
2 Drawer

Installation instructions for mounting

Image: 3-point lock with accessories

1

2

Type 6-H toolbox

Size (width x depth x height)
630 x 600 x 545 mm

Material
HD-PE black

Weight
8.30 kg

Execution
The lid is riveted to the box with 3 hinges. The hinges and rivets are made from stainless steel (V2A) and the closing angles are made from aluminium.
The lock is protected from the elements with a cap.

Attention: Not a stock item!
Minimum order volume 10 pc.

Feature
The flat floor and slip resistance in conjunction with the mounting enable the installation of batteries and heavy equipment.

1 Mount with base plate and cross beams
2 Drawer

Locking system as per description on page 31

Article	Art. No.	Price [€]
3-point lock		
With double bit security lock	**206 30 305**	
With wing knob	**206 30 415**	

Accessories

Article	Weight [kg]	Art. No.	Price [€]
Mounting Flat steel, 80 x 5 mm, galvanized, incl. screws with cross beams and base plate	21.90	**406 20 036**	
Drawer PS, black 585 x 500 x 58 mm	1.60	**406 20 020**	
Fitting of mounting to the toolbox		**417 20 035**	
Unhingeable chains For limiting the lid opening to max. 90°		**499 20 001**	

Installation instructions for mounting

1

2

Image: 3-point lock with accessories

Type 7 toolbox

Size (width x depth x height)
545 x 600 x 630 mm

Material
HD-PE black

Weight
7.90 kg

Execution
The lid is riveted to the box with 3 hinges. The hinges and rivets are made from stainless steel (V2A) and the closing angles are made from aluminium.
The lock is protected from the elements with a cap. The hinges can be on the left or right side.

Locking system as per description on page 31

Article	Art. No.	Price [€]
3-point-lock		
With double bit security lock	**207 30 300**	
With wing knob	**207 30 410**	

Accessories

Article	Weight [kg]	Art. No.	Price [€]
Mounting (pair) Flat steel, 40 x 5 mm, galvanized, incl. screws	6.50	**407 20 030**	
Drawer PS, black, 500 x 525 x 58 mm	1.50	**407 20 020**	
Fitting of mounting to the toolbox		**499 20 035**	

1 Mounting
2 Drawer

Installation instructions for mounting

Image: 3-point lock with accessories

1

2

Type 8 toolbox

Size (width x depth x height)
820 x 600 x 540 mm

Material
HD-PE black

Weight
9.70 kg - 9.80 kg

Execution
The lid is riveted to the box with 4 hinges. The hinges and rivets are made from stainless steel (V2A) and the closing angles are made from aluminium.
The lock of the 3-point locking system is protected from the elements by means of a cap.

Locking system as per description on page 31

Article	Art. No.	Price [€]
3-point-lock		
With double bit security lock	**208 30 300**	
With wing knob	**208 30 410**	
Circlip lock		
With locking split pin	**208 40 000**	
With padlock	**208 40 600**	

Accessories

Article	Weight [kg]	Art. No.	Price [€]
Mounting (pair) Flat steel, 80 x 5 mm, galvanized, incl. screws	13.60	**408 20 030**	
Drawer PS, black, 773 x 560 x 70 mm	2.20	**408 20 020**	
Fitting of mounting to the toolbox		**499 20 035**	
Unhingeable chains For limiting the lid opening to max. 90°		**499 20 001**	

1 Mounting
2 Drawer

Installation instructions for mounting

1

2

Image: 3-point lock with accessories

Type 9 toolbox

Size (width x depth x height)
650 x 610 x 400 mm

Material
HD-PE black

Weight
6.70 kg

Execution
The lid is riveted to the box with 3 hinges. The hinges and rivets are made from stainless steel (V2A) and the closing angles are made from aluminium.
The lock is protected from the elements with a cap.

Attention: Not a stock item!
Minimum order volume 10 pc.

Locking system as per description on page 31

Article	Art. No.	Price [€]
3-point-lock		
With double bit security lock	**209 30 300**	
With wing knob	**209 30 410**	

Accessories

Article	Weight [kg]	Art. No.	Price [€]
Mounting (pair) Flat steel, 40 x 5 mm, galvanized, incl. screws	5.30	**409 20 030**	
Drawer PS, black, 600x 545 x 70 mm	1.80	**402 20 020**	
Fitting of mounting to the toolbox		**499 20 035**	
Unhingeable chains For limiting the lid opening to max. 90°		**499 20 001**	

1 Mounting
2 Drawer

Installation instructions for mounting

Image: Snap lock with accessories

1

Type 10 toolbox

Size (width x depth x height)
920 x 470 x 510 mm

Material
HD-PE black

Weight
8.50 kg - 8.60 kg

Execution
The lid is riveted to the box with 4 hinges. The hinges and rivets are made from stainless steel (V2A) and the closing angles are made from aluminium.
The lock of the 3-point locking system is protected from the elements by means of a cap.

Locking system as per description on page 31

Article	Art. No.	Price [€]
3-point-lock		
With double bit security lock	**210 30 300**	
With wing knob	**210 30 410**	
Snap lock		
With locking split pin	**210 60 000**	
With padlock	**210 60 600**	

Accessories

Article	Weight [kg]	Art. No.	Price [€]
Mounting (pair) Flat steel, 40 x 5 mm, galvanized, incl. screws	7.00	**410 20 030**	
Fitting of mounting to the toolbox		**499 20 035**	
Unhingeable chains For limiting the lid opening to max. 90°		**499 20 001**	

1 Mounting

Installation instructions for mounting

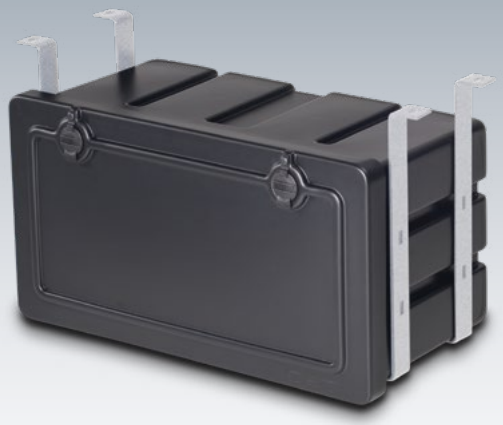

1

2

Image: 2-point lock with accessories

Type 13 toolbox

Size (width x depth x height)
650 x 330 x 350 mm

Material
HD-PE black

Weight
3.90 kg - 4.30 kg

Execution
The lid is riveted to the box with 3 hinges. The hinges and rivets are made from stainless steel (V2A) and the closing angles are made from aluminium.
The locks of the 2-point and 3-point locking system are protected from the elements by means of a cap.

Locking system as per description on page 31

Article	Art. No.	Price [€]
2-point lock		
With double bit security lock	**213 20 300**	
With cylinder lock	**213 20 400**	
3-point-lock		
With double bit security lock	**213 30 300**	
With wing knob	**213 30 410**	

Accessories

Article	Weight [kg]	Art. No.	Price [€]
Mounting (pair) Flat steel, 40 x 4 mm, galvanized, incl. screws	4.10	**413 20 030**	
Drawer PS, black, 613 x 272 x 70 mm	1.10	**413 20 020**	
Fitting of mounting to the toolbox		**499 20 035**	
Unhingeable chains For limiting the lid opening to max. 90º		**499 20 001**	

1 Mounting
2 Drawer

Installation instructions for mounting

Image: 3-point lock with accessories

1

2

Type 13-S toolbox

Size (width x depth x height)
650 x 300 x 350 mm

Material
HD-PE black

Weight
3.90 kg - 4.20 kg

Execution
The lid is riveted to the box with hinges.
The hinges and rivets are made from stainless steel (V2A) and the closing angles are made from aluminium.
The lock is protected from the elements with a cap.

Locking system as per description on page 31

Article	Art. No.	Price [€]
3-point-lock		
With double bit security lock	**213 30 305**	
With wing knob	**213 30 415**	

Accessories

Article	Weight [kg]	Art. No.	Price [€]
Mounting (pair) Flat steel, 40 x 4 mm, galvanized, incl. screws	4.10	**413 20 035**	
Drawer PS, black, 610 x 235 x 75/50 mm	1.30	**413 20 025**	
Fitting of mounting to the toolbox		**499 20 035**	
Unhingeable chains For limiting the lid opening to max. 90°		**499 20 001**	

1 Mounting
2 Drawer

Installation instructions for mounting

1

2

Image: 3-point lock with accessories

Type 15 toolbox

Size (width x depth x height)
650 x 440 x 350 mm

Material
HD-PE black

Weight
4.70 kg

Execution
The lid is riveted to the box with 3 hinges. The hinges and rivets are made from stainless steel (V2A) and the closing angles are made from aluminium.
The lock is protected from the elements with a cap.

Locking system as per description on page 31

Article	Art. No.	Price [€]
3-point-lock		
With double bit security lock	**215 30 300**	
With wing knob	**215 30 410**	

Accessories

Article	Weight [kg]	Art. No.	Price [€]
Mounting (pair) Flat steel, 40 x 5 mm, galvanized, incl. screws	5.00	**402 20 030**	
Drawer PS, black, 610 x 380 x 55 mm	1.35	**415 20 020**	
Fitting of mounting to the toolbox		**499 20 035**	
Unhingeable chains For limiting the lid opening to max. 90°		**499 20 001**	

1 Mounting
2 Drawer

Installation instructions for mounting

Image: 3-point lock with accessories

1

2

Type 16 toolbox

Size (width x depth x height)
650 x 430 x 400 mm

Material
HD-PE black

Weight
4.90 kg

Execution
The lid is riveted to the box with 3 hinges. The hinges and rivets are made from stainless steel (V2A) and the closing angles are made from aluminium.
The lock is protected from the elements with a cap.

Locking system as per description on page 31

Article	Art. No.	Price [€]
3-point-lock		
With double bit security lock	**216 30 300**	
With wing knob	**216 30 410**	

Accessories

Article	Weight [kg]	Art. No.	Price [€]
Mounting (pair) Flat steel, 40 x 5 mm, galvanized, incl. screws	5.40	**416 20 030**	
Drawer HD-PE, black, 610 x 380 x 55 mm	1.35	**415 20 020**	
Fitting of mounting to the toolbox		**499 20 035**	
Unhingeable chains For limiting the lid opening to max. 90°		**499 20 001**	

1 Mounting
2 Drawer

Installation instructions for mounting

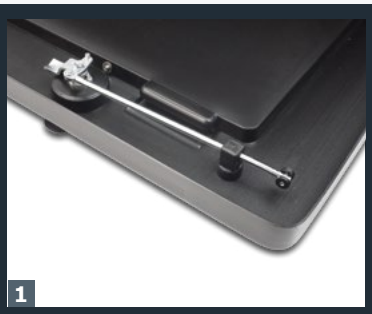

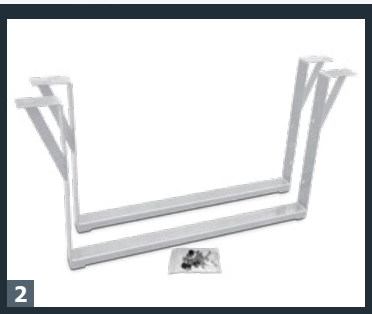

Image: 4-point lock with accessories

Type 17 toolbox

Size (width x depth x height)
1200 x 550 x 630 mm

Material
HD-PE black

Weight
17.70 kg with space divider

Execution
The lid is riveted to the box with 5 hinges. The hinges and rivets are made from stainless steel (V2A) and the closing angles are made from aluminium.
The locks are protected from the elements by means of a cap.

A removable space divider is included.

Locking system as per description on page 31

Article	Art. No.	Price [€]
4-point lock		
With double bit security lock	**217 50 300**	
With wing knob	**217 50 410**	

Accessories

Article	Weight [kg]	Art. No.	Price [€]
Mounting Flat steel, 80 x 5 mm, galvanized, incl. screws with cross beams and base U-beam (square)	26,10	**417 20 030**	
Space divider (already integrated) PS, black 590 x 525 x 60 mm	1,60	**417 20 010**	
Drawer PS, black 550 x 480 x 55 mm	1,50	**417 20 020**	
Fitting of mounting to the toolbox		**417 20 035**	
Unhingeable chains For limiting the lid opening to max. 90°		**499 20 001**	

1 4-point lock
2 Mounting with base profile and cross beams
3 Drawer
4 Space divider

Installation instructions for mounting

Image: 3-point lock with accessories

1

2

Type 18 toolbox

Size (width x depth x height)
480 x 400 x 440 mm

Material
HD-PE black

Weight
4.10 kg

Execution
The lid is riveted to the box with 2 hinges. The hinges and rivets are made from stainless steel (V2A) and the closing angles are made from aluminium.
The lock is protected from the elements with a cap.

Locking system as per description on page 31

Article	Art. No.	Price [€]
3-point-lock		
With double bit security lock	**218 30 300**	
With wing knob	**218 30 410**	

Accessories

Article	Weight [kg]	Art. No.	Price [€]
Mounting (pair) Flat steel, 40 x 4 mm, galvanized, incl. screws	4.00	**418 20 030**	
Drawer PS, black 445 x 345 x 65 mm	0.90	**418 20 020**	
Fitting of mounting to the toolbox		**499 20 035**	
Unhingeable chains For limiting the lid opening to max. 90°		**499 20 001**	

1 Mounting
2 Drawer

Installation instructions for mounting

1

Image: 3-point lock with accessories

Type 18-V toolbox

Size (width x depth x height)
440 x 410 x 480 mm

Material
HD-PE black

Weight
4.10 kg

Execution
The lid is riveted to the box with 2 hinges. The hinges and rivets are made from stainless steel (V2A) and the closing angles are made from aluminium.
The lock is protected from the elements with a cap. The hinge can be on the left or right side.

Locking system as per description on page 31

Article	Art. No.	Price [€]
3-point-lock		
With double bit security lock	**218 30 300**	
With cylinder lock	**218 30 410**	

Accessories

Article	Weight [kg]	Art. No.	Price [€]
Mounting (pair) Flat steel, 40 x 4 mm, galvanized, incl. screws	4.00	**418 20 035**	
Fitting of mounting to the toolbox		**499 20 035**	

1 Mounting

Installation instructions for mounting

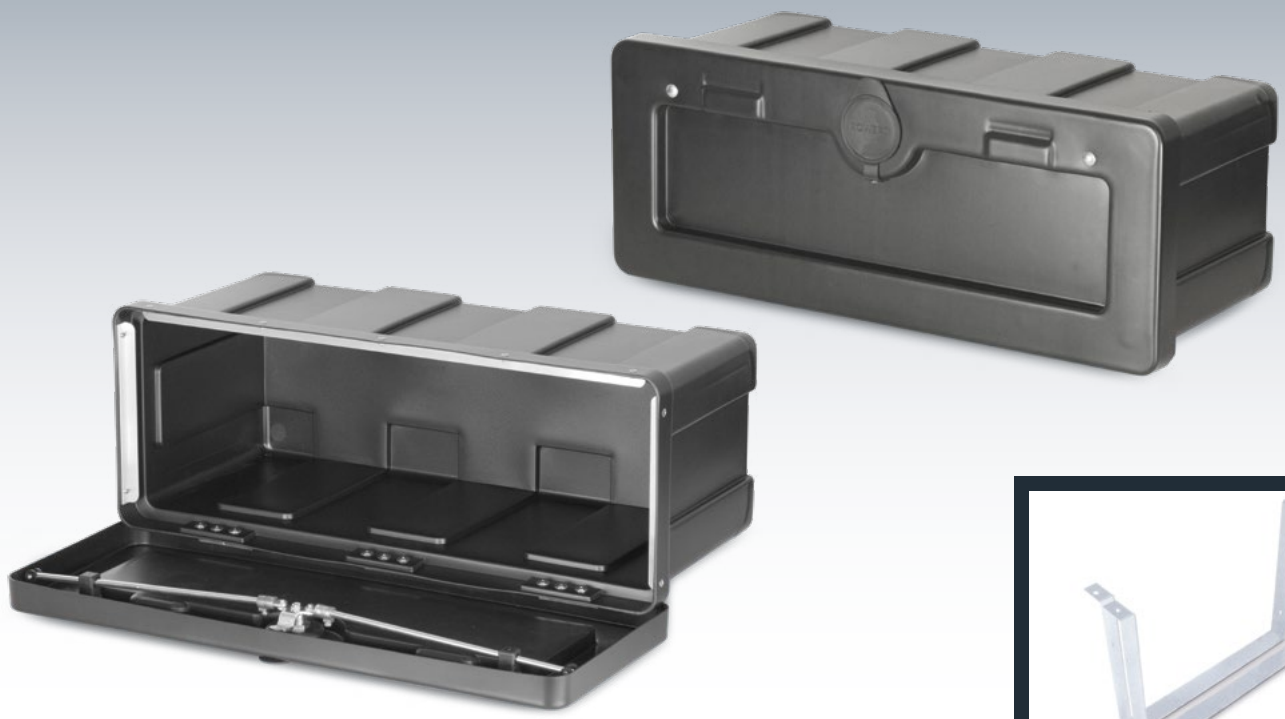

Image: 3-point lock with accessories

1

Type 20 toolbox

Size (width x depth x height)
720 x 310 x 280 mm

Material
HD-PE black

Weight
3.80 kg

Execution
The lid is riveted to the box with 3 hinges. The hinges and rivets are made from stainless steel (V2A) and the closing angles are made from aluminium.
The lock is protected from the elements by means of a cap.

Locking system as per description on page 31

Article	Art. No.	Price [€]
3-point-lock		
With double bit security lock	**220 30 300**	
With cylinder lock	**220 30 410**	

Accessories

Article	Weight [kg]	Art. No.	Price [€]
Mounting (pair) Flat steel, 40 x 4 mm, galvanized, incl. screws	4.50	**420 20 030**	
Fitting of mounting to the toolbox		**499 20 035**	
Unhingeable chains For limiting the lid opening to max. 90°		**499 20 001**	

1 Mounting

Installation instructions for mounting

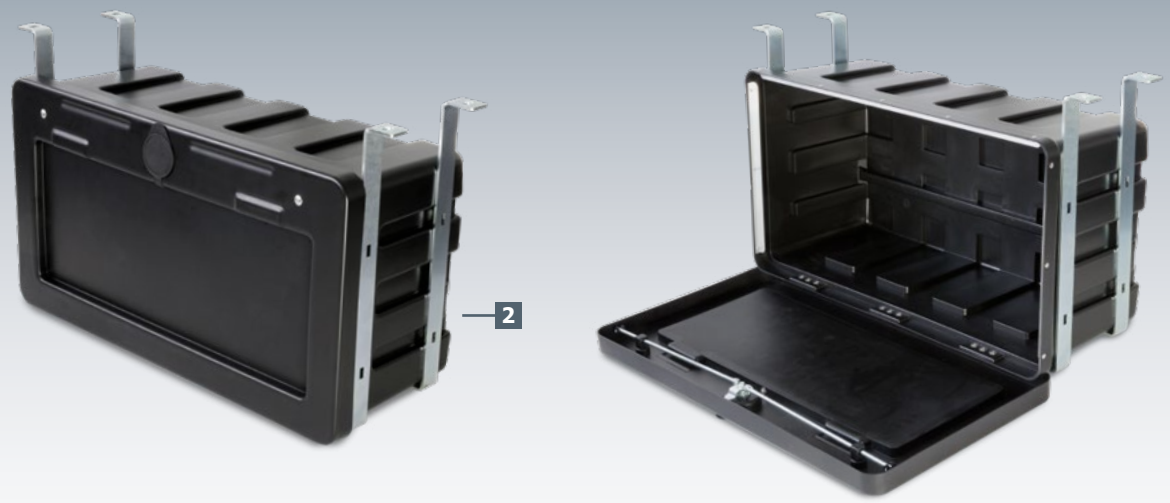

1

2

3

Image: 3-point lock with accessories

Type 28 toolbox

Size (width x depth x height)
845 x 340 x 465 mm

Material
HD-PE black

Weight
7.00 kg

Execution
The lid is riveted to the box with 3 hinges. The hinges and rivets are made from stainless steel (V2A) and the closing angles are made from aluminium.
The lock is protected from the elements with a cap. The hinge can be on the left or right side.

The rear of the box is specifically adapted for platform vehicles. (FIAT Ducato – p. 55)

Locking system as per description on page 31

Article	Art. No.	Price [€]
3-point-lock		
With double bit security lock	**228 30 300**	
With cylinder lock	**228 30 410**	

Accessories

Article	Weight [kg]	Art. No.	Price [€]
Mounting (pair) Flat steel, 40 x 5 mm, galvanized, incl. screws	6.20	**428 20 030**	
Drawer HD-PE, black, canted 800 x 235 x 60/40 mm	1.6	**428 20 020**	
Fitting of mounting to the toolbox		**499 20 035**	
Unhingeable chains For limiting the lid opening to max. 90°		**499 20 001**	

1 Mounting
2 Rear of box
3 Drawer

Installation instructions for mounting

1

Mounting for type 28 on FIAT Ducato

Material
Flat steel 60 x 5 mm, galvanized

Execution
The crate is screwed together with just one bracket at the front on the underside of the platform. The installation parts for rear mounting on the chassis are included. (See detailed installation instructions)

When ordering this mounting, together with the type 28 toolbox, the bracket is already pre-installed on the crate (at no additional cost).

Article	Weight [kg]	Art. No.
Mounting (unit) Flat steel 60 x 5 mm, galvanized, incl. screws and packing plates (figure 1)	4.90	**925 66 101**

1 Mounting

Installation instructions for mounting

1

Image: 3-point lock with accessories

Type 29 toolbox

Size (width x depth x height)
560 x 360 x 430 mm

Material
HD-PE black

Weight
4.4 kg

Execution
The lid is riveted to the box with 3 hinges.
The hinges and rivets are made from stainless steel (V2A) and the closing angles are made from aluminium.
The lock is protected from the elements by means of a cap.

Locking system as per description on page 31

Article	Art. No.	Price [€]
3-point-lock		
With double bit security lock	**229 30 300**	
With cylinder lock	**229 30 410**	

Accessories

Article	Weight [kg]	Art. No.	Price [€]
Mounting (pair) Flat steel, 40 x 4 mm, galvanized, incl. screws	4.20	**429 20 030**	
Fitting of mounting to the toolbox		**499 20 035**	
Unhingeable chains For limiting the lid opening to max. 90º		**499 20 001**	

1 Mounting

Installation instructions for mounting

Examples of customer-specific requirements for series production.

Just ask, we are happy to help and work with you to find the best solution.

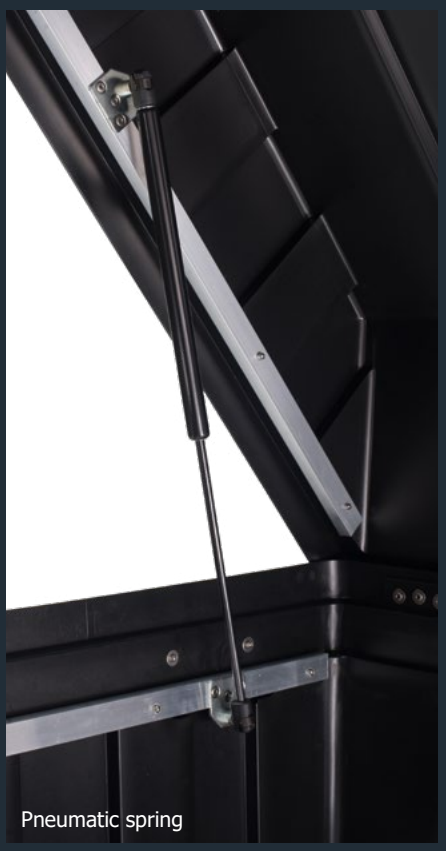

Pneumatic spring

The reliable way of transporting tools on platform trucks. The light tare weight of just 33.7 kg (incl. handles) means that the box is easy to transport and can be comfortably packed and unpacked in the workshop or on the construction site. Tool transportation: clean, practical, theft-proof!

Good ideas for simple handling
– Box can be placed close to the driver's cabin to avoid an unnecessary reduction of the cargo area. The 45° cover opening angle means that the box can be opened wide.
– Rear view is not inhibited
– Gas pressure springs hold the cover open

Available as an accessory
– Anti-skid mount on the platform
– Handles for transportation

Approved ROWEKO quality
– Light and robust construction from HD-PE
– Impact-resistant, even in extreme temperatures
– Splash-water-resistant and weatherproof
– Chemical and UV-resistant
– Hinges and rivets made from VA steel
– Safe and secure: Snap lock

1

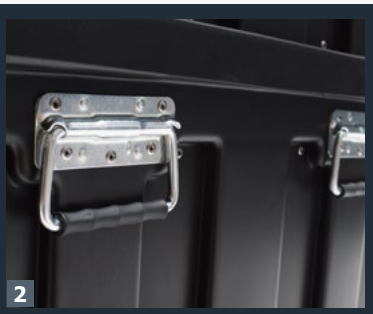
2

Platform toolbox

Size (width x depth x height)
1750 x 800 x 720 mm

Material
HD-PE black

Weight
32.50 kg

Execution
The lid (snap lock) is riveted to the box with 7 hinges. 2 gas pressure springs make it easy to open the lid and keep it open. For additional reinforcement, angles are riveted to the front (with cover) and sides. The hinges and rivets are made from stainless steel (V2A) and the angles are made from aluminium.

Locking system as per description on page 31

Article	Art. No.	Price [€]
Snap lock		
With locking split pin	**221 60 000**	
With padlock (simultaneous locking)	**221 60 600**	

Accessories

Article	Weight [kg]	Art. No.	Price [€]
Assembled handles 4 pieces max. weight of 35 kg each	1.20	**221 60 001**	
Mounting profiles	1.90	**421 20 030**	
– 2 x clamp plates (540 x 96 x 10 mm) – Screw set for box installation			

1 Mounting profiles
2 Handles

Installation instructions for platform crate

The open platform truck is, in many ways, the ideal vehicle for industry and trade. Only one thing is missing – a secure place to store machines, tools and assembly materials. These are often simply put in the driver's cabin.

The ROWEKO platform box brings order.
Clean – practical – theft-proof.

No matter how individual the requirements, or how different the vehicles may be – we have the right platform box for everyone.
– Various sizes
– A range of heights (standard H = 400 mm)
– Cover is held by chains
– Rear view is not inhibited

Available as an accessory
– Mounting profiles for fixed mounting on the platform
– Stainless steel U-frame with guide rails and retractable divider (standard for width of 1350 mm)

Approved ROWEKO quality
– Light and robust construction from HD-PE
– Impact-resistant, even in extreme temperatures
– Weatherproof
– Chemical and UV-resistant
– Hinges and rivets made from stainless steel

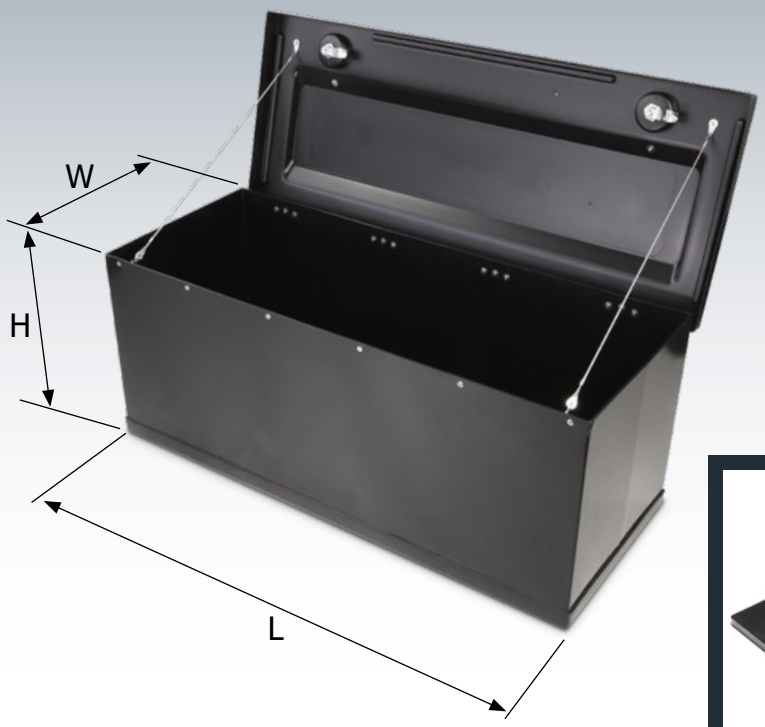

1

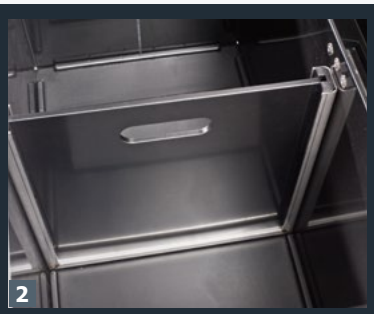
2

Platform box

Size (length x width x height)
1350 x 400 x 400 mm
1000 x 400 x 400 mm
800 x 400 x 400 mm

Material
HD-PE black

Execution
Platform box for vertical installation only!

– Box canted and welded
– End piece welded to box
– Higher lid with VA hinges riveted on to box
– 2-point lock + security lock (standard: double bit) with 2 keys, lock cover
– Lid opening restricted to around 110º by means of removable chains
– Standard height of 400 mm

Other heights available upon request

Locking system as per description on page 31

Article	Weight [kg]	Art. No.	Price [€]
2-point lock With double bit security lock			
Width of 1,350 mm	17.20	**227 20 300**	
Width of 1,000 mm	10.60	**226 20 300**	
Width of 800 mm	9.10	**225 20 300**	

Accessories

Article	Weight [kg]	Art. No.	Price [€]
Mounting profiles (2 units) made from black HD-PE with 4 washers	0.60	**426 200 30**	
U-frame Standard for model 1350, made from stainless steel with guide rails and removable HD-PE space divider riveted in	3.00	**426 200 38**	

1 Mounting profiles
2 U-frame with space divider

Installation instructions for platform box

ROWEKO
KUNSTSTOFFVERARBEITUNG

VA hinges

Pluggable lid

Snap lock

Car trailers do not provide much space for storing tools and transport locks.
Fitting a storage box makes everything easily accessible. With 7 different sizes and different locking mechanisms, we have the right storage box for every trailer.

The simple and robust HD-PE design makes the storage boxes weatherproof and impact-resistant. They can even withstand extreme temperatures, chemicals, and UV rays.

Characteristics
– Approved by the German technical inspection agency (TÜV)
– No coating required
– Can be mounted horizontally or vertically
– Waterproof
– Hinges and rivets made from corrosion-proof VA steel
– Mount available as accessory

Designs
– Fixed cover with VA-hinges
– Cover can be removed with VA push-fit brackets (ideal for when the cover cannot be fully opened due to eyes or installation obstructing the way)

Mounts
For safely mounting a storage box on a trailer, universal mounts or clamping profiles are ideal. (p. 75)

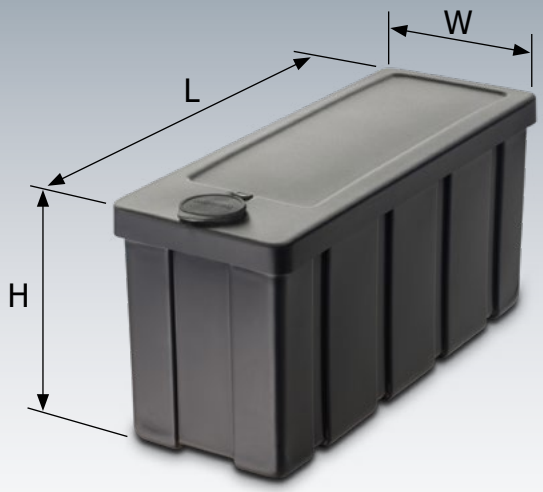

1

2

Type R01 Storage box

Size (length x width x height)
650 x 245 x 310 mm

Material
HD-PE black

Execution
– Detachable lid with push-fit brackets or hinged lid
– Lock with security lock (standard: double bit) with 2 plastic keys, lock cover
– Assembly parts made from stainless steel and aluminium
– Other locking systems (p. 96)

Article	Weight [kg]	Art. No.	Price [€]
With detachable lid	2.85	**501 10 300**	
With hinged lid	2.90	**501 10 350**	
With hinged lid and snap lock	2.90	**501 60 050**	

Accessories

Article	Weight [kg]	Art. No.	Price [€]
Inserts for small parts PS black	0.40	**501 20 020**	
Suitable restraint systems on p. 71			

1 Insert for small parts
2 Snap lock

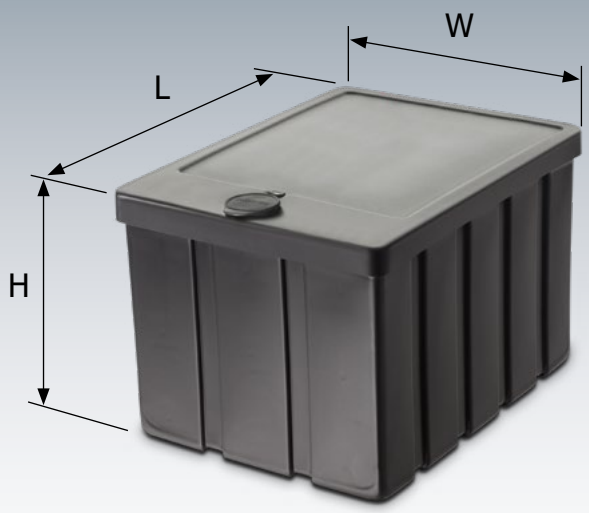

Type R02 storage box

Size (length x width x height)
560 x 430 x 360 mm

Material
HD-PE black

Execution
– Detachable lid with push-fit brackets or hinged lid
– Lock with security lock (standard: double bit) with 2 plastic keys, lock cover
– Assembly parts made from stainless steel and aluminium
– Other locking systems (p. 96)

Article	Weight [kg]	Art. No.	Price [€]
With detachable lid	3.90	**502 10 300**	
With hinged lid	3.90	**502 10 350**	

Accessories

Article	Weight [kg]	Art. No.	Price [€]
Suitable restraint systems on p. 71			

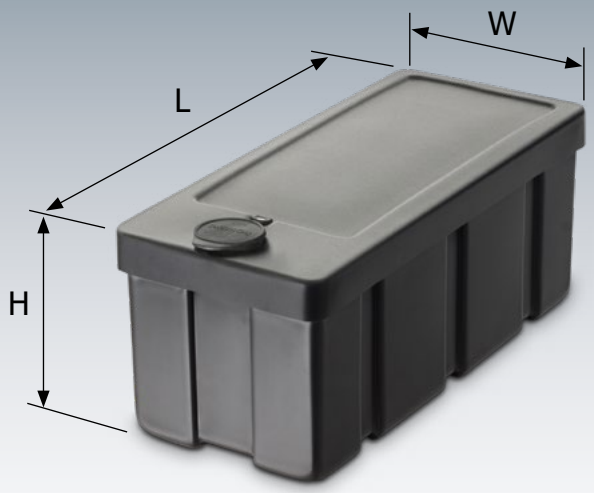

1

Type R03 storage box

Size (length x width x height)
500 x 220 x 205 mm

Material
HD-PE black

Execution
– Detachable lid with push-fit brackets or hinged lid
– Lock with security lock (standard: double bit) with 2 plastic keys, lock cover
– Assembly parts made from stainless steel and aluminium
– Other locking systems (p. 96)
– Snap lock with locking split pin only available in conjunction with hinges

Article	Weight [kg]	Art. No.	Price [€]
With detachable lid	1.90	**503 10 300**	
With hinged lid	2.00	**503 10 350**	
With hinged lid and snap lock	1.90	**503 60 050**	

Accessories

Article	Weight [kg]	Art. No.	Price [€]
Suitable restraint systems on p. 71			

1 Snap lock

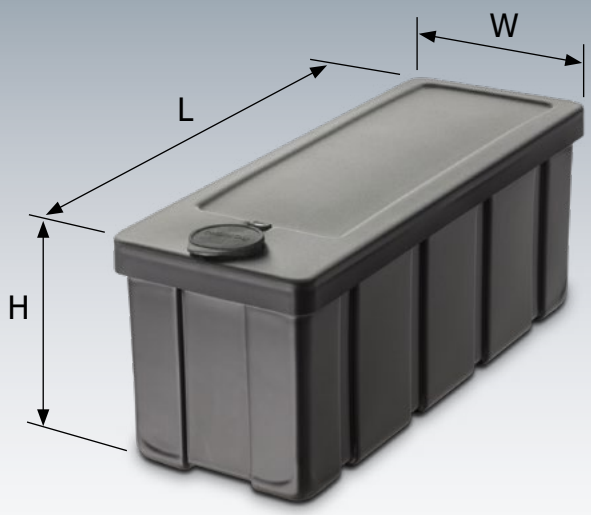

1

Type R04 storage box

Size (length x width x height)
650 x 245 x 260 mm

Material
HD-PE black

Execution
– Detachable lid with push-fit brackets or hinged lid
– Lock with security lock (standard: double bit) with 2 plastic keys, lock cover
– Assembly parts made from stainless steel and aluminium
– Other locking systems (p. 96)

Article	Weight [kg]	Art. No.	Price [€]
With detachable lid	2.60	**504 10 300**	
With hinged lid	2.65	**504 10 350**	

Accessories

Article	Weight [kg]	Art. No.	Price [€]
Insert for small parts PS black	0.40	**501 20 020**	
Suitable restraint systems on p. 71			

1 Insert for small parts

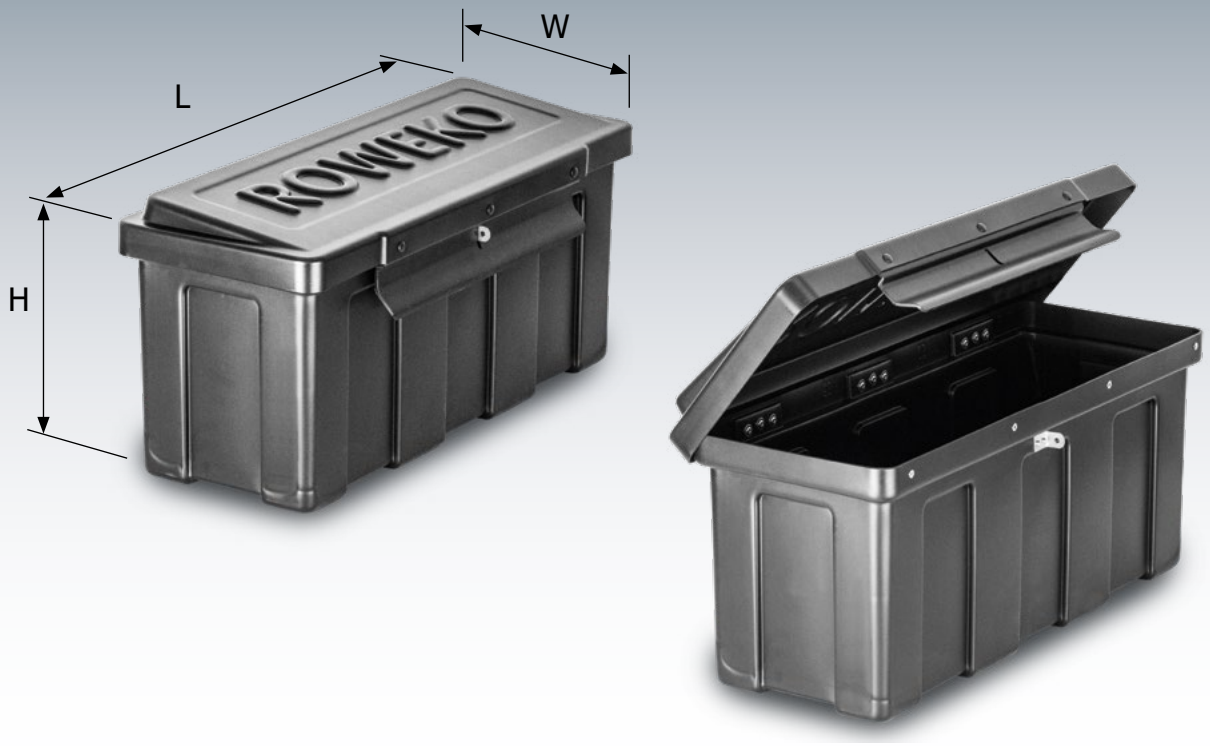

Type R05 storage box

Size (length x width x height)
720 x 280 x 310 - 340 mm

Material
HD-PE black

Execution
– Hinged lid with hinges along long side
– Snap lock and locking split pin
– Assembly parts made from stainless steel and aluminium
– Sloping lid with ROWEKO logo

Article	Weight [kg]	Art. No.	Price [€]
With hinged lid	3.70	**505 60 050**	

Accessories

Article	Weight [kg]	Art. No.	Price [€]
Suitable restraint systems on p. 71			

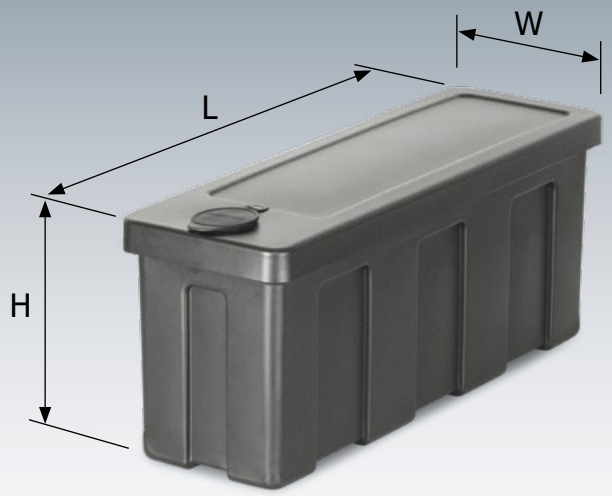

Type R06 storage box

Size (length x width x height)
720 x 240 x 300 mm

Material
HD-PE black

Execution
- Detachable lid with push-fit brackets or hinged lid
- Lock with security lock (standard: double bit) with 2 plastic keys, lock cover
- Assembly parts made from stainless steel and aluminium
- Other locking systems (p. 96)

Article	Weight [kg]	Art. No.	Price [€]
With detachable lid	3.00	**506 10 300**	
With hinged lid	3.00	**506 10 350**	

Accessories

Article	Weight [kg]	Art. No.	Price [€]
Suitable restraint systems on p. 71			

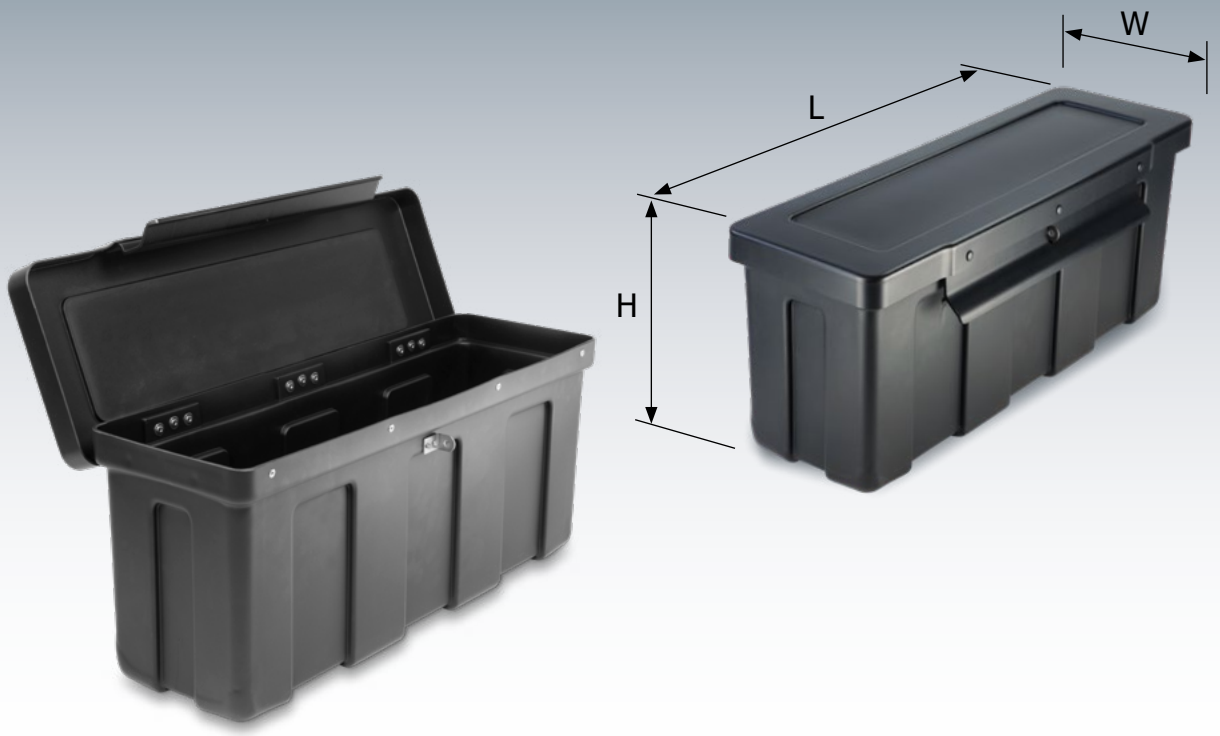

Type R07 storage box

Size (length x width x height)
720 x 240 x 300 mm

Material
HD-PE black

Execution
– Hinged lid with hinges along long side
– Snap lock and locking split pin
– Assembly parts made from stainless steel and aluminium

Article	Weight [kg]	Art. No.	Price [€]
With snap lock	3.00	**507 60 050**	

Accessories

Article	Weight [kg]	Art. No.	Price [€]
Suitable restraint systems on p. 71			

Restraint systems for ROWEKO storage boxes

Universal mount

Material: 3/5 mm steel, hot-dip galvanised

Scope of delivery

– 2 x U profile with fastening clip
– 2 x U profile (50 x 22 x 350 mm) with holes
– Set of screws for mounting

Instructions for mounting universal holder

Suitable for models: R01 / R02 / R03 / R04 / R05 / R06 / R07

Article	Weight [kg]	Art. No.	Price [€]
Universal mount	2.4	**501 20 030**	
Universal mount (only R02 / L = 530 mm)	3.1	**502 20 030**	

Clamping profile for V-drawbar

Material: HD-PE black

Scope of delivery

– 4 x clamping profile (40 x 40 x 50 mm)
– Set of screws for mounting

Instructions for mounting a V-drawbar

Suitable for models: R01 / R02 / R03 / R04 / R05 / R06 / R07

Article	Weight [kg]	Art. No.	Price [€]
Clamping profile for V-drawbar	0.50	**501 20 930**	

Bracket for suspended installation

Material: Aluminium blank

Scope of delivery

– 2 x L bracket
– Screw set for box installation

Instructions for mounting bracket

Suitable for models: R01 / R03 / R04 / R06 / R07

Article	Weight [kg]	Art. No.	Price [€]
Bracket for suspended installation (150 x 160 x 50 mm / t=4)	0.65	**501 20 830**	

Suitable for models: R01 / R02 / R03 / R04 / R05 / R06 / R07

Article	Weight [kg]	Art. No.	Price [€]
"Long" bracket for suspended installation (150 x 270 x 50 mm / t=4)	1.0	**501 20 836**	

Coupling cabinet

Filter mat box type 5

Exhaust air purification

Intelligent solutions for the daily use of silo vehicles

- Coupling cabinets with a size that ideally utilises the available space and provides sufficient storage space for all couplings and flanges.
- Mat boxes with a depth that allows the storage of a CPO filter mat.
- Tank exhaust filter for clean, quiet, and filtered exhaust air. This means that unloading can also take place in residential areas and spa towns without problems.
- Air suction channels supply the compressor with the required air and avoid the sucking in of dust, dirt, and exhaust gases that are found at street level.
- Individual add-on parts for superstructure manufacturers such as remote-controlled tubulars, protective caps for under-ride side guard profiles, casing for hydraulic aggregates, and top filters. Contact us for more information!

ROWEKO
KUNSTSTOFFVERARBEITUNG

Filter mat boxes for containers (on request)

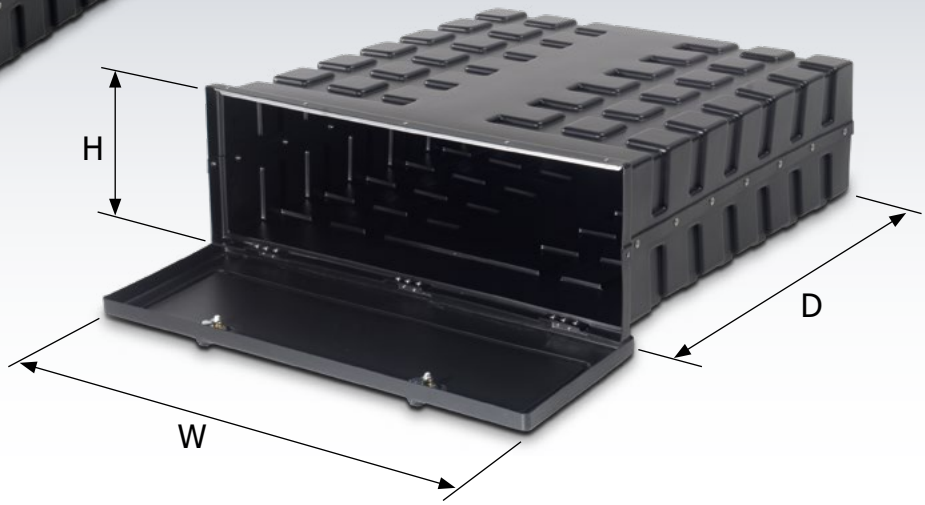

1

Filter mat box

Size (width x depth x height)
960 x 960 x 340 mm

Material
HD-PE black

Weight
12.40 kg

Execution
The container is made from 2 half-shells. The two halves are then connected by means of VA rivets.
The cover (2-point lock) is riveted to the container with 3 hinges. The hinges and rivets are made from stainless steel (V2A) and the closing angles are made from aluminium. The locks are protected from the elements by means of a cap.

Locking system as per description on page 31

Article	Art. No.	Price [€]
2-point lock		
With double bit security lock	**205 20 300**	
With cylinder lock	**205 20 400**	

Accessories

Article	Weight [kg]	Art. No.	Price [€]
Canvas bag For CPO filter mat, natural colours, 100 x 120 cm, with cord	1.50	**405 00 001**	

1 Canvas bag

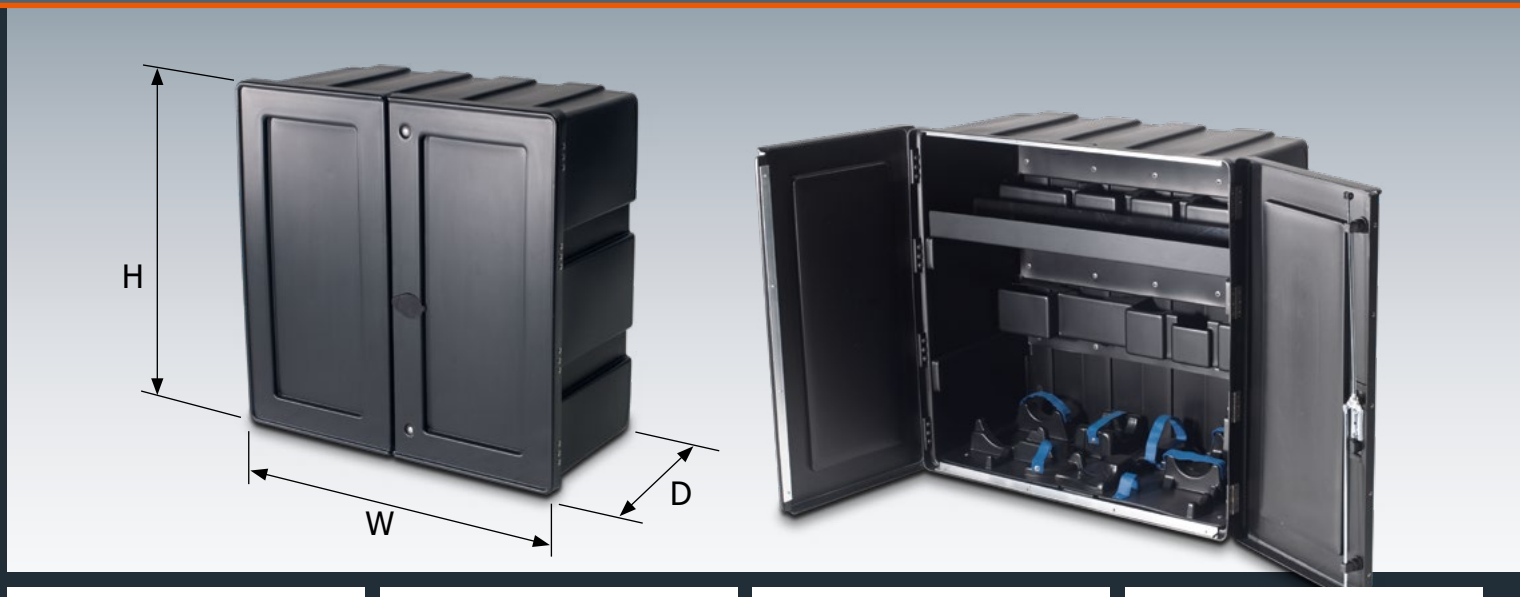

1

2

3

4

Coupling cabinet

Size (width x depth x height)
920 x 460 x 920 mm

Material
HD-PE black

Weight
15.10 kg

Execution
The doors are riveted to the box with 4 hinges each. The hinges and rivets are made from stainless steel (V2A) and the closing angles are made from aluminium. The doors also have a circumferential EPDM seal.
The lock is protected from the elements by means of a cap.
The accessories give an overview of all couplings and flanges.

1 Pocket wall
2 Drawer
3 Mounted bottom
4 Shelf for securing clips

Coupling cabinet partition

Closing systems

Article	Art. No.	Price [€]
3-point lock		
With wing knob	**219 30 410**	

Accessories

Article	Weight [kg]	Art. No.	Price [€]
Pocket wall Black HD-PE with 10 openings + 1 hook	3.00	**419 10 000**	
Drawer Black HD-PE, edged with riveted aluminium angles on the sides, 875 x 190 x 70 mm	1.55	**419 20 020**	
Mounted bottom Black HD-PE, for 6 couplings and tube adapters, incl. belts, side holder for pipe elbow, 2 side hooks	1.60	**419 20 000**	
Shelf for securing clips Black HD-PE, edged and riveted side aluminium bracket, 4 welded tube sleeves, 2 welded support cables (VA), 880 x 250 x 160 mm	2.90	**419 20 025**	

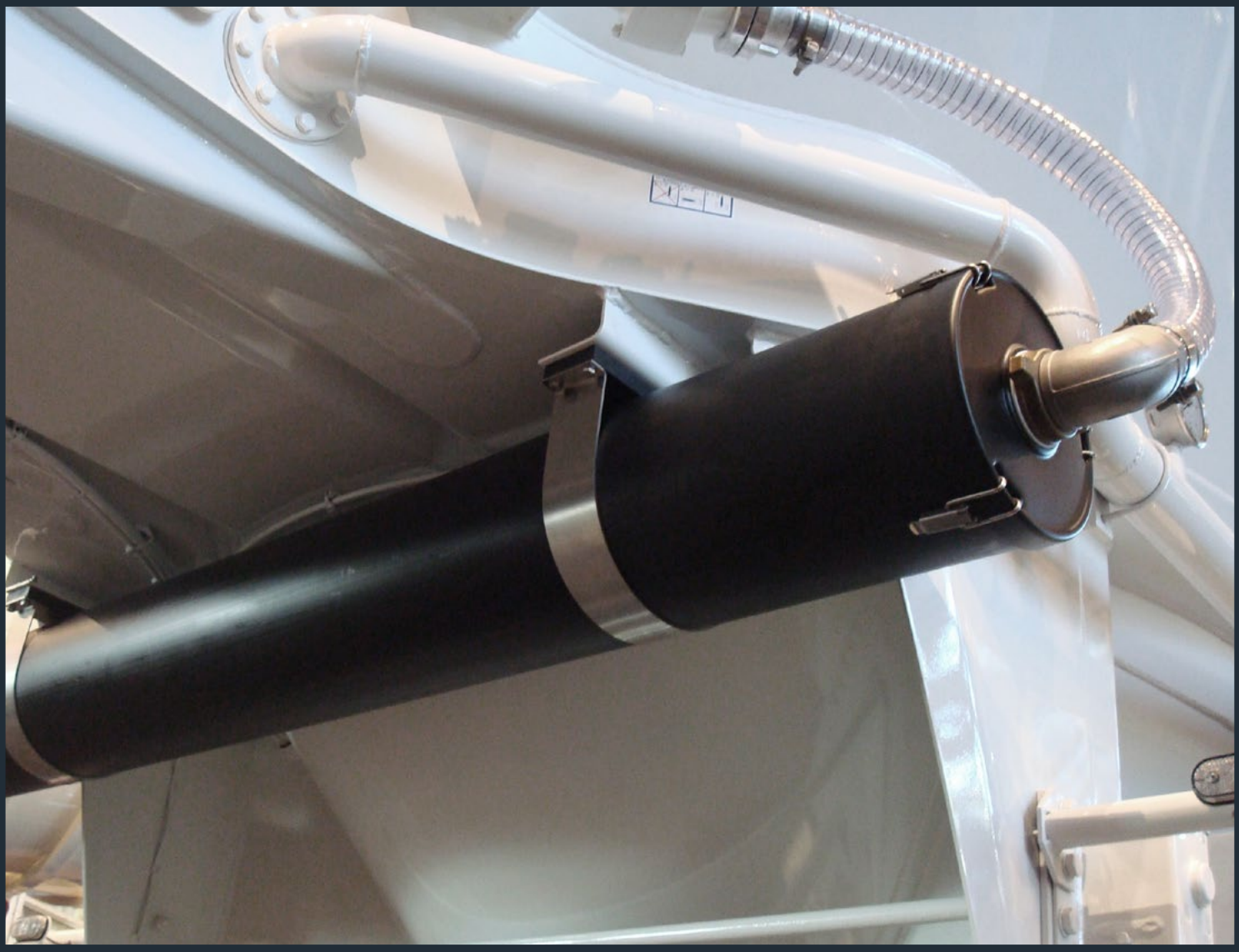

1

2

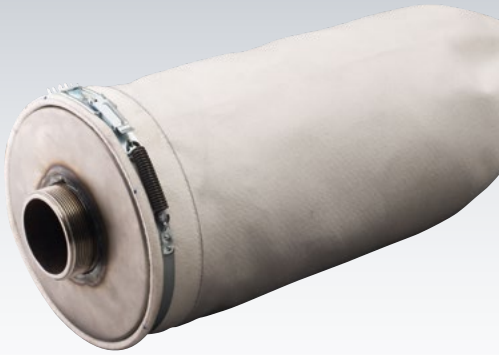

3

Exhaust air purification

Material
Tube: HD-PE black
Filter: Polyester needle felt (FOS-tex 7-022)

Execution
Tube: Tube Ø of 250 x 6.1 mm, length of 2,000 mm, front cap with filter tube is retained by means of 3 clamps (riveted to tube), end cap with air outlet slots and internal spray protect, welded to the tube.

Filter: Filter tube Ø of 200 mm, length of 1,800 mm, moisture refuse, air permeability of approx. 250 l/m²/min, filter tube lid Ø of 200 mm, 50 mm high with welded-on steep nipple. R2 ½" external thread.
Strap with control spring for filter tube.

Accessories:
Fastening clip

Article	Weight [kg]	Art. No.	Price [€]
Tube	11.20	**104 20 001**	
Filter unit	1.60	**404 20 001**	

Accessories

Article	Weight [kg]	Art. No.	Price [€]
Fastening clip for exhaust air purification, 2 parts, consisting of: Elbow with plates made from stainless steel and tube carrier plate made from polyethylene (HD-PE), without screws	1.40	**404 00 004**	

Spare parts

Article	Weight [kg]	Art. No.	Price [€]
Front cap with hole	0.25	**404 00 002**	
Clamp for front cap	0.05	**413 00 009**	
End cap with air outlet slots and internal spray protection	0.55	**404 00 003**	
Filter tube (L = 1,800 mm)	0.55	**404 20 002**	
Filter tube lid with thread	0.25	**404 20 003**	
Strap with control spring	0.08	**404 20 004**	

1 Fastening clip
2 End cap with internal spray protect
3 Filter unit

Air intake duct for compressors

To prevent excessive pressure, dust or exhaust gases from getting into the compressor, all ROWEKO air intake ducts are designed so that the air is sucked in from areas of the vehicle that are not near the floor.

The simple installation of the individual components keeps both the shipping and follow-up costs low. All components are available as individual or spare parts.

Air suction channel

1 Air suction channel

Size (width x height x depth)
300 x 1600 x 80 mm

Material
HD-PE black

Execution
2 halves, welded together, rear smooth, 5 ventilation slots, connecting branch optionally Ø 110 or 120 mm

Article	Weight [kg]	Art. No.	Price [€]
Connecting piece with Ø of 110 mm	3.90	**600 18 110**	
Connecting piece with Ø of 120 mm	3.90	**600 18 120**	

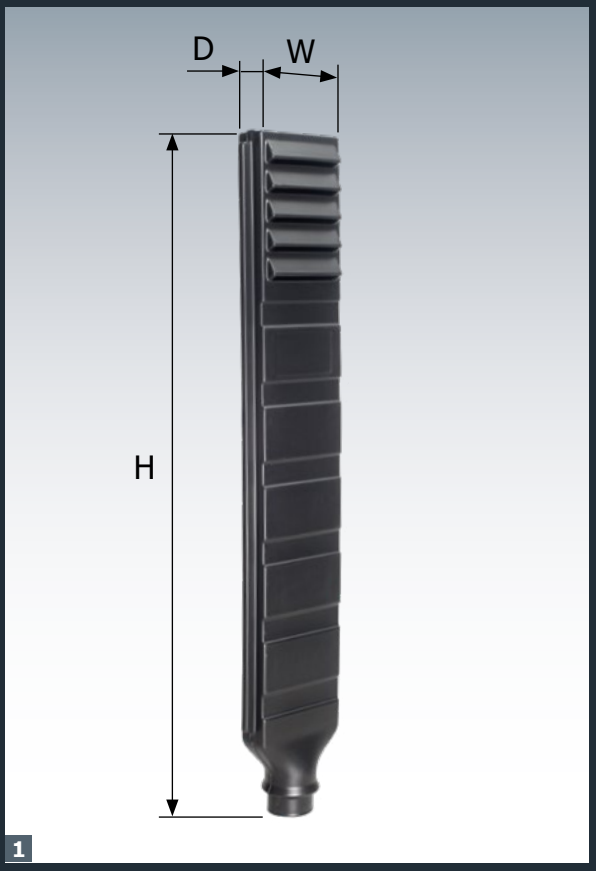

1

2 Air suction channel XL

Size (width x height x depth)
330 x 2150 x 170 mm
Mount hole distance of 300 mm

Material
HD-PE black

Execution
– 2 tubes with Ø of 110 x 2000 mm (standard length), welded with connection piece with Ø of 102 or 125 mm
– 2 fastening clips, pre-mounted, height-adjustable
– Cap with ventilation slots, incl. mounting rivets for mounting to suction tubes

Article	Weight [kg]	Art. No.	Price [€]
Connecting piece with Ø of 102 mm	4.70	**600 16 102**	
Connecting piece with Ø of 125 mm	4.70	**600 16 125**	

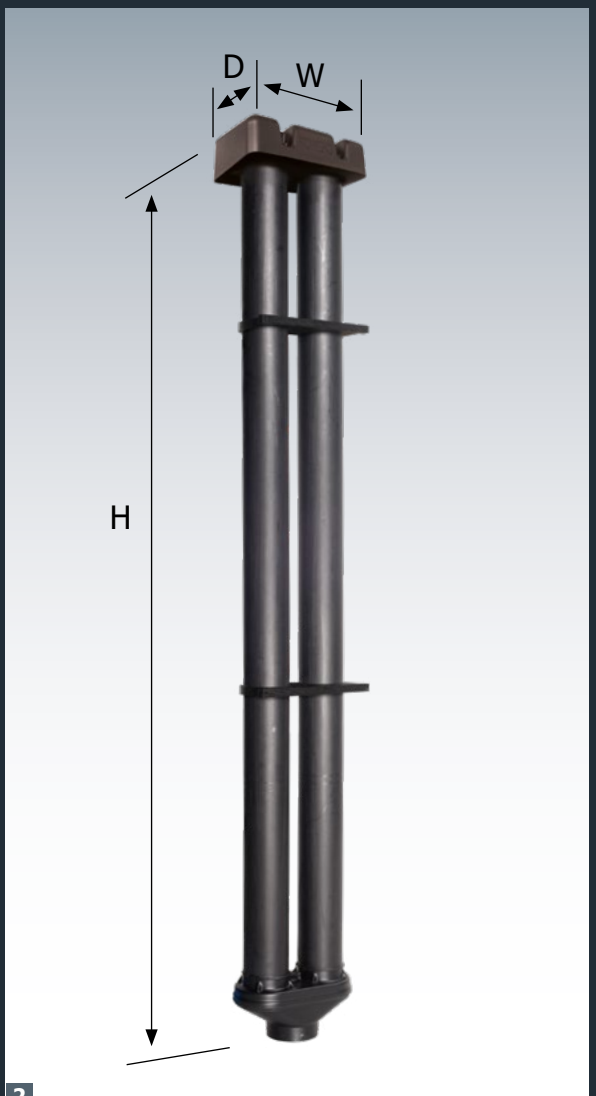

2

Load-securing equipment

Load-securing equipment for petrol cans and gas bottles

This load-securing device enables the quick securing of petrol cans and gas bottles in closed vehicles or on an open platform. With the hinged supports permanently fixed to the side wall, the load-securing device can be folded down to save space when it is not being used and then quickly pulled up when needed and secured in a slightly slanted position. In the standard version, 2 x 20l metal canisters and one 11 kg gas bottle can be secured so that they cannot slip. Other combinations and sizes are also available.

Bestätigung

GTÜ

Hiermit bestätigen wir der

Roweko Kunststoffverarbeitung GmbH
in Lauffen am Neckar

die Übereinstimmung der von ihr gefertigten

**Ladungssicherungsvorrichtung
für den Transport von
20 Liter Stahlkanistern und/oder
11 kg Propan-Gasflaschen**

mit den derzeit geltenden Anforderungen
der VDI-Richtlinie 2700 und
der Europanorm EN 12195
zur Ladungssicherung gem. den
§§ 22 und 23 StVO sowie
den §§ 30 und 31 StVZO.

Stuttgart, 09.03.2012

Dipl.-Ing. Hermann Schenk

GEPRÜFTE LADUNGSSICHERUNG
GTÜ
www.gtue.de

GTÜ approval

1

Load-securing equipment

Size (width x depth x height)
840 x 390 x 80 mm (version 602 02 011)
710 x 390 x 80 mm (version 602 02 020)
760 x 390 x 80 mm (version 602 01 111)

Material
HD-PE black

Execution
HD-PE plastic, bent and CNC-machined depending on the design, 70° stop edge + recessed grip. 2 hinged supports are riveted onto the outside of the load-securing device using VA rivets. The stop height is limited to approx. 70° by VA rivets. A drilling template for attachment to the side wall is included.

Please note:
Load-securing system for the transportation of dangerous goods. The regulations of BG BAU apply (regulation for small quantities for supply transport).

Article	Weight [kg]	Art. No.	Price [€]
Load-securing equipment For the transport of canisters/gas bottles			
1 20 L / 20 L / 11 kg	2.7	**602 02 011**	
2 20 L / 20 L / 20 L	2.3	**602 02 020**	
3 11 kg / 11 kg	2.7	**600 01 111**	

Accessories

Article	Weight [kg]	Art. No.	Price [€]
Spacers, HD-PE black, 40 x 40 mm, set of 2	0.60	**602 20 030**	

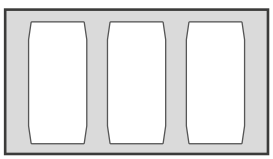

2

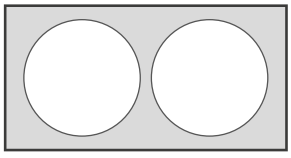

3

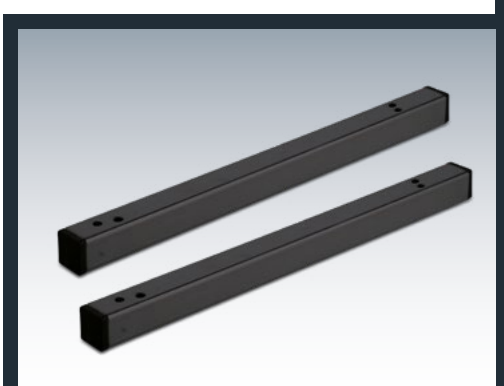

4

4 Spacers

Instructions for mounting load securing device

Perfectly secured and stored in a space-saving manner.

ROWEKO load securing equipment ensures that your transporter is always tidy on the road. The practical lashing strap reel rolls straps cleanly and tidily in just a few seconds. They can thus be quickly stowed, together with their associated ratchets, in the appropriate strap drums or shells.

Individual securing devices for petrol cans, gas cylinders or threaded rods also keep your load handy and exactly where it belongs.

Instructions for mounting belt retractor

Belt retractor

Material
HD-PE + POM, black

Execution 4-piece, consisting of:
– Hand crank
– Shaft for belts up to 8.0 m long and 50 mm wide (standard) or Axle for belts up to 10.0 m long and 60 mm wide (large)
– Plate with hooks
– Floor plate (excl. fastening material)

Article	Weight [kg]	Art. No.	Price [€]
Standard belt retractor belts up to 8.0 m long, 50 mm wide	0.89	**600 30 001**	
Large belt retractor belts up to 10.0 m long, 60 mm wide	1.00	**600 30 002**	

Spare parts

Article	Weight [kg]	Art. No.	Price [€]
Hand crank (PA6)	0.18	**600 30 091**	
Shaft for belts 50 mm wide (Standard)	0.17	**600 30 092**	
Plate (Standard)	0.38	**600 30 093**	
Floor plate	0.16	**600 30 094**	
Shaft for belts 60 mm wide	0.21	**600 30 095**	
Plate (Large)	0.45	**600 30 096**	

Standard = 50 mm
Large = 60 mm

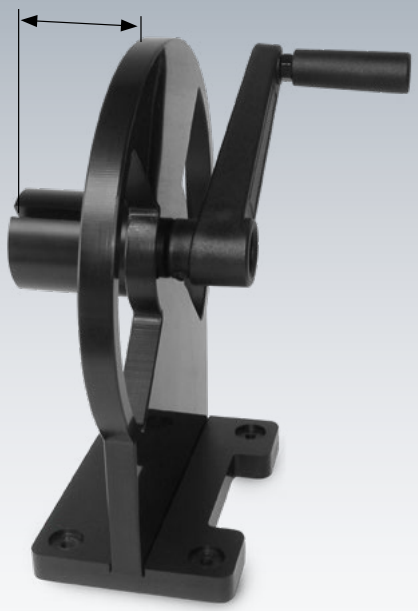

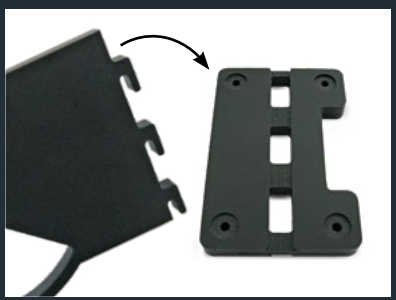

1

2

1 Drum for belts and ratchets

Material
HD-PE black

Execution
– Tube
– Riveted end cap
– Carrying straps

Capacity
– Drum Ø of 250 mm, Height 250 mm
5 belts with length of 10.0 m and width of 50 mm

Article	Weight [kg]	Art. No.	Price [€]
Drum Ø 250 x 6.2 x 250 mm Height	1.50	**600 30 250**	

2 Belt tray for ratchets and belts

Size (width x depth x height)
535 x 150 x 150 mm

Material
HD-PE black

Execution
The belt tray is suitable for storing 3 belts, with a width of 35 mm and 3 ratchets. The optimum belt length is 6.0 m. The fixation is carried out using 2 x screw fittings on the airline aluminium rail. For easier mounting, the fastening holes are in an oblong-hole design.

Article	Weight [kg]	Art. No.	Price [€]
Belt tray without screw fitting	0.58	**600 40 000**	
Belt tray with 2 x screw fitting	0.70	**600 40 050**	

Accessories

Article	Weight [kg]	Art. No.	Price [€]
Screw fitting with star grip M8 x 19, for airline aluminium rail, star grip Ø 40 mm	0.06	**600 40 090**	

Belt and ratchets are not included in the scope of delivery.

3 Screw fitting with star grip

3

1

Threaded-rod holder

Size
Tube-Ø 125 x 3.1 x 750 mm

Material
HD-PE black

Execution
The threaded-rod holder is suitable for the secure storage of rods of all types (e.g. threaded rods). The inner apportionment (1 x tube Ø 63 mm / 2 x tube Ø 50 mm) makes it possible to sort or pick the various rods needed in advance. 2 consoles are welded onto the tube as standard and these make it easy to mount the tube onto wall units.

Article	Weight [kg]	Art. No.	Price [€]
Threaded-rod holder with partition (1 x Ø 63 mm / 2 x Ø 50 mm)	2.30	**601 25 750**	
Threaded-rod holder without partition	1.40	**601 25 759**	

Threaded rods are not included in the scope of delivery.

1 Tube clip

Size
Hole distance: 170 mm
Exterior dimensions: 190 mm x 165 mm (width x height)

Material
HD-PE black, t=15 mm

Bores suitable for M6 screws.

ROWEKO
KUNSTSTOFFVERARBEITUNG

For the secure, weatherproof storage of cargo documents.

The document rolls are available in diameters ranging from 40 to 125 mm. Two types of locks are available: a lockable door or a screw cover. The tube reaches the door at each type of document roll. As a result, there is no barrier caused by an interior seam in the tube.
Individual sheets of paper can be easily removed, even with small diameters.

Matching fastening clips or consoles are available as accessories.

Files and folders can be stored in the document boxes.

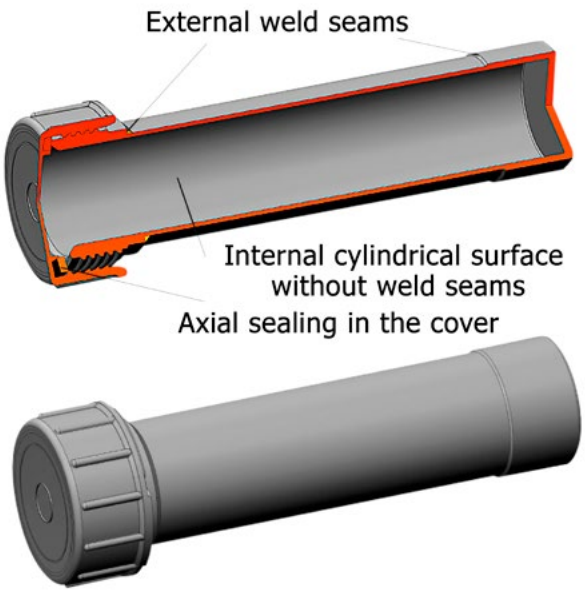

1

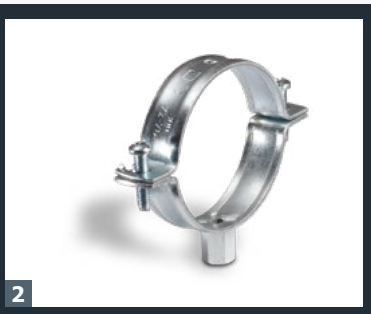

2

Document roll with fixed cover with hinges

Size
Tube: Ø 70 x 1.9 x 330 mm
Lid: Ø 100 mm

Tube: Ø 90 x 2.2 x 330 mm
Lid: Ø 120 mm

Material
HD-PE black

Execution
The flange and end cap are welded to the tube. The lid is riveted to the flange with a VA hinge and is locked with a wing knob (standard).
1 key is included.

Article	Weight [kg]	Art. No.	Price [€]
Document roll Ø 75 mm			
With wing knob	0.28	**461 05 075**	
With gag (without key)	0.28	**461 05 775**	
Document roll Ø 90 mm			
With wing knob	0.40	**461 05 090**	
With gag (without key)	0.40	**461 05 790**	

Accessories

Article	Weight [kg]	Art. No.	Price [€]
Fastening console for document roll HD-PE black. If you order the console at the same time, it is automatically welded onto the document roll (hinge catch right, see image). Other mounts are available.			
Tube Ø of 75/90 mm	0.10	**461 50 075**	
Fastening clip for document roll 2-part, zinc-plated steel with welded nut			
Tube Ø of 75 mm	0.11	**461 70 075**	
Tube Ø of 90 mm	0.11	**461 70 090**	

1 Fastening console
2 Fastening clip
(two required for each document roll)

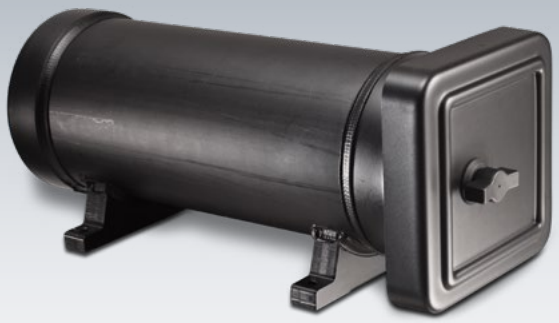

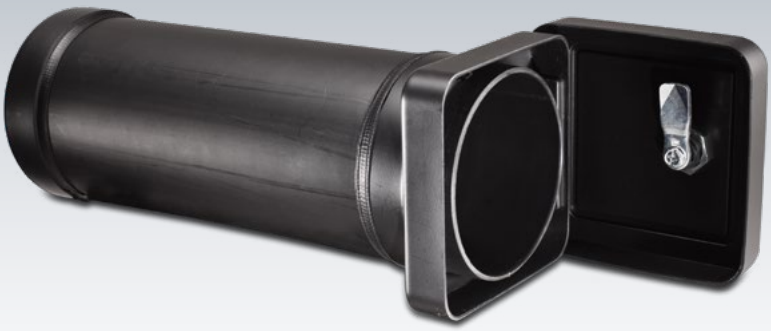

1

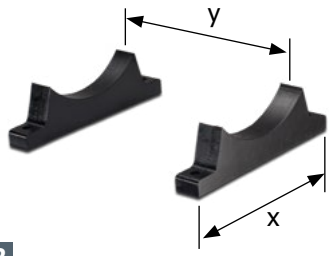

2

3

Document roll with fixed cover with hinges

Size
Tube: Ø 125 x 3.1 x 330 mm
Lid: 150 x 150 x 35 mm
Mounting of console to tube:
x = 130 mm, y = 200 mm

Material
HD-PE black

Execution
The flange and end cap are welded to the tube. The lid is riveted to the flange with a VA hinge and is locked with a wing knob (standard).
2 keys are included.

Article	Weight [kg]	Art. No.	Price [€]
Document roll			
With wing knob	0.79	**461 06 000**	
With gag (without key)	0.79	**461 06 001**	

Accessories

Article	Weight [kg]	Art. No.	Price [€]
1 Fastening clip for Document roll 2-piece, galvanised steel with welded nut			
Tube Ø of 125 mm	0.18	**461 70 125**	
2 Fastening console 2-part, black HD-PE If you order the console at the same time, it is automatically welded onto the document roll (hinge catch right, see image). Other mounts are available.	0.14	**461 06 100**	
3 Single tube clip for document roll single, HDPE black			
Tube Ø of 125 mm	0.13	**461 08 125**	

1 Fastening clip for tube with Ø of 125 mm (two required for each document roll)
2 Fastening console
3 Tube clip for tube-Ø 125 mm (single)

1

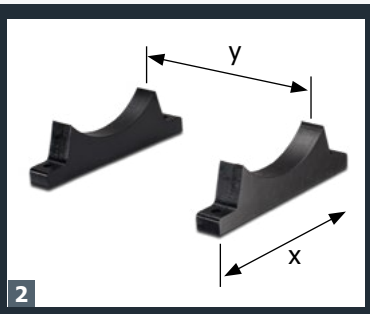

2

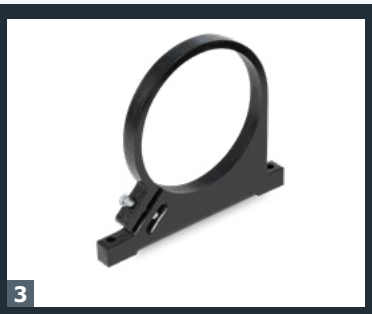
3

4

Document roll with screw cover

Size
Tube: Ø of 40 – 110 mm, length of 330 mm (standard)
Lid: Ø of 55 – 145 mm

Material
HD-PE black

Execution
The lid (with thread and seal) is welded with the tube from the outside and the end cap is press-fitted into the tube.

Accessories
Stainless steel retaining cable to secure the lid, plastic coated

1 Fastening clip for tube with Ø of 40 mm – 110 mm (two required for each document roll)
2 Fastening console tube with Ø of 110 mm
3 Tube clip for tube Ø 90 mm to Ø 125 mm
4 Retaining cable

Article	Weight [kg]	Art. No.	Price [€]
Document roll			
Tube Ø of 40 mm	0.13	**461 07 040**	
Tube Ø of 50 mm	0.23	**461 07 050**	
Tube Ø of 63 mm	0.36	**461 07 063**	
Tube Ø of 75 mm	0.40	**461 07 075**	
Tube Ø of 90 mm	0.58	**461 07 090**	
Tube Ø of 110 mm	0.80	**461 07 110**	

Accessories

Article	Weight [kg]	Art. No.	Price [€]
1 Fastening clip for Document roll 2-piece, galvanised steel with welded nut			
Tube Ø of 40 mm	0.047	**461 70 040**	
Tube Ø of 50 mm	0.054	**461 70 050**	
Tube Ø of 63 mm	0.096	**461 70 063**	
Tube Ø of 75 mm	0.107	**461 70 075**	
Tube Ø of 90 mm	0.110	**461 70 090**	
Tube Ø of 110 mm	0.125	**461 70 110**	
2 Fastening console for Document roll 2-part, black HD-PE. If you order the console at the same time, it is automatically welded onto the document roll. x = 130 mm, y = 200 mm			
Tube Ø of 110 mm	0.14	**461 06 100**	
3 Tube clip for document roll single/double, HD-PE black			
Tube Ø of 90 mm	0.10	**461 08 090**	
Tube Ø of 110 mm	0.11	**461 08 110**	
Tube Ø of 125 mm	0.13	**461 08 125**	
4 Retaining cable	0.03	**461 79 001**	

Fig.: With inspection window (surcharge)

Document box type 1

Size (width x depth x height)
300 x 85 x 385 mm

Material
HD-PE black

Execution
The lid (locking with wing knob – standard) is fixed with 2 hinges to the box (riveted). The hinges and rivets are made from stainless steel (V2A) and the closing angle is made from aluminium. An EPDM seal is also integrated into the lid.
1 key is included.

Article	Weight [kg]	Art. No.	Price [€]
Document box			
with wing knob	1.23	**460 05 000**	
with gag (without key)	1.23	**460 05 001**	

Accessories

Article	Weight [kg]	Art. No.	Price [€]
Window Made from polycarbonate, 175 x 125 mm, welded in	0.10	**460 05 990**	

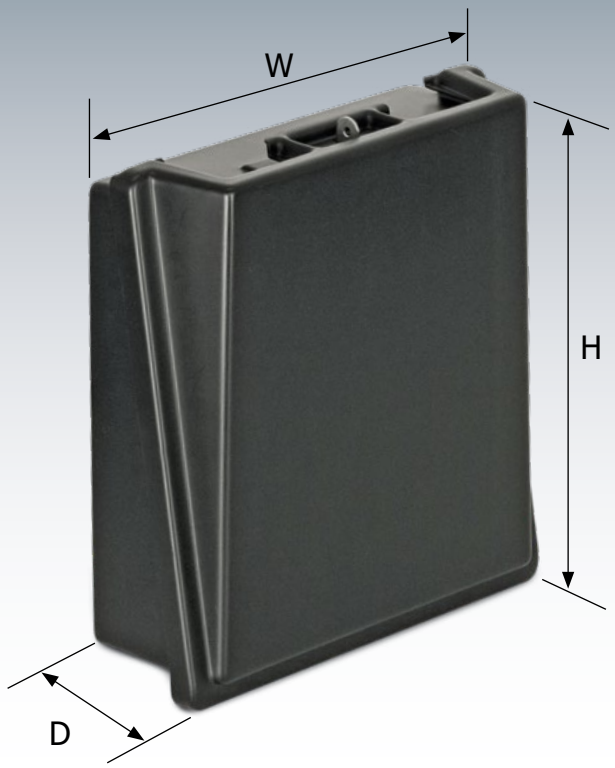

Document box type 2

Size (width x depth x height)
355 x 125 x 365 mm

Material
HD-PE black

Execution
The lid (snap lock) is riveted to the box with 2 hinges.
The hinges, padlock angle, and rivets are made from stainless steel (V2A).
For DIN A4 folder up to 80 mm wide.

Article	Weight [kg]	Art. No.	Price [€]
Document box with snap lock	1.20	**460 05 600**	

Accessories

Article	Weight [kg]	Art. No.	Price [€]
Window Made from polycarbonate, 175 x 125 mm, welded in	0.10	**460 05 990**	

Protective cap for wheel nut

Black hubcaps
HD-PE black

Execution
Suitable for wheel nuts M22 x 1,5 - SW = 32
Minimum purchase quantity: 200 St. (VE)

Article	Weight [kg]	Art. No.	Price [€]
Height of 40 mm	0.006	**480 10 000**	
Height of 50 mm	0.008	**480 10 001**	

Chromed hubcaps
Plastic ABS

Execution
Suitable for wheel nuts M22 x 1,5 - SW = 32
Minimum purchase quantity: 60 St. (VE)

Article	Weight [kg]	Art. No.	Price [€]
Height of 45 mm	0,016	**480 10 102**	
Logo (Ø 20 mm) wanted? - contact and ask us about this today.			

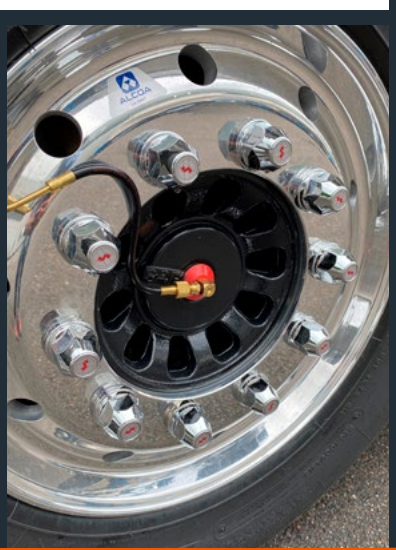

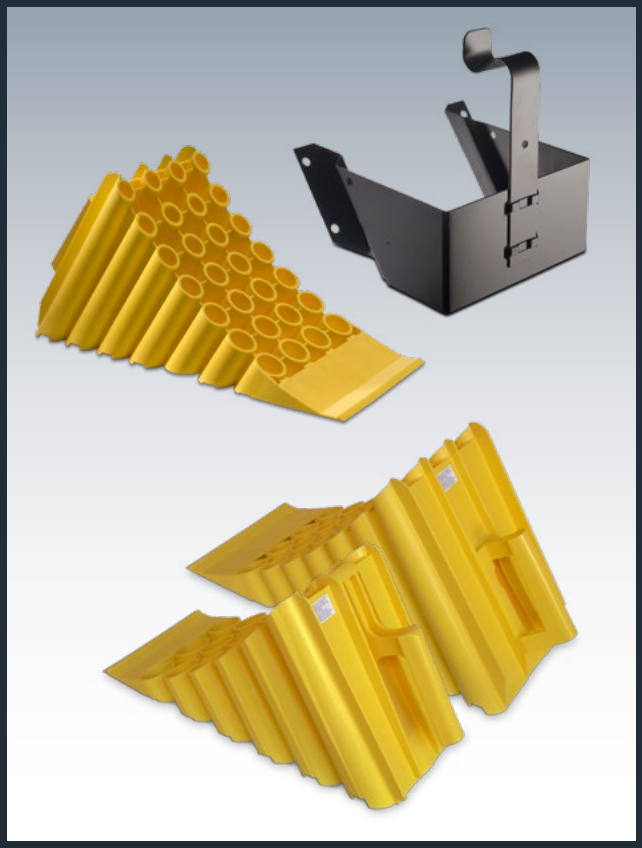

Wheel chock

Size (length x width x height)
Size 53: 485 x 200 x 245 mm
Size 46: 400 x 160 x 200 mm

TÜV certificate G46

TÜV certificate G53

Material
PE yellow

Execution
TÜV certified as per DIN 76051-D53Z.
Honeycomb/tube structure, plastic anti-skid inserts, handle.

Article	Weight [kg]	Part no.	Price [€]
Wheel chock			
Size 53	2.40	**615 05 408**	
Size 46	0.90	**615 05 409**	
Steel mounting Black, covered with plastic			
Size 53	1.30	**615 05 407**	
Size 46	1.00	**615 05 410**	

XBlock folding chock

Size (length x width x height)
Size 53 open: 450 x 220 x 245 mm
Size 53 closed: 480 x 80 x 245 mm
Size 46 open: 370 x 190 x 205 mm
Size 46 closed: 390 x 80 x 245 mm

Material
Yellow PE with steel core

Execution
TÜV certified as per DIN 76051-D53Z.
Innovative plastic structure with a steel core, which combines low weight (40% lighter) and maximum performance.

Article	Weight [kg]	Art. No.	Price [€]
1 **XBlock chock**			
Size 53	1.20	**615 05 411**	
Size 46	0.85	**615 05 413**	
2 **Holder for 2x XBlock** Size 46/53 with strap	0.37	**615 11 412**	
3 **Holder for alu bars** black HD-PE, without screws			
Size 53	0.21	**615 11 000**	

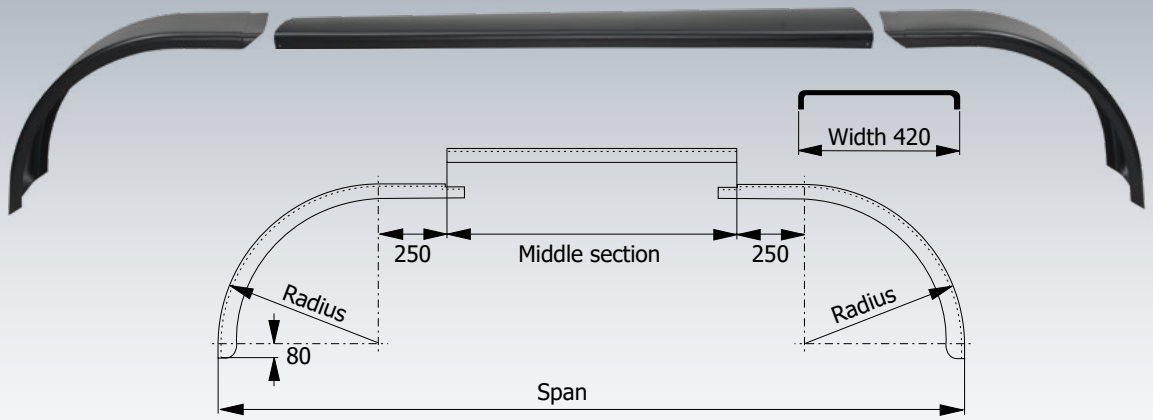

1

Multi-axle mudguard for 2-/ 3-axle unit

Span length (standard):
3-axle unit = 4,250 mm

Lenght central part: 2.350 mm
or according to customer instructions
Radius of curved sections: 700 mm
Width: 420 mm

Material
HD-PE black

Execution
- Middle section, double-sided with 7 mounting holes
- Mounting accessories (VA rivets and washers) optionally available

Article	Weight [kg]	Art. No.	Price [€]
Central part 2350 mm Other lengths on request.	4.70	**456 10 000**	
Radius of curved section 700 mm	2.50	**455 10 000**	

Attention: Not a stock item!
Minimum order volume 20 pc.

1 Mounting for mudguard

Size
Extension length of 360 mm, adjustable range of 190 mm for radii of 650-700 mm

Material
Black polyamide plastic (PA) + GRP

Complete mounting
consisting of:
- 2 arches with clamp for tube with Ø of 42 mm and fastening material
- 1 tube (glass fibre reinforced plastic), Ø of 42 mm, length of 580 mm or 750 mm
- 1 mounting for chassis
- End cap for GRP tube, Ø of 42 mm

Article	Weight [kg]	Art. No.	Price [€]
Variable arch	0.21	**350 99 001**	
GRP tube			
Ø of 42 mm, length of 580 mm	0.43	**350 99 002**	
Ø of 42 mm, length of 750 mm	0.59	**350 99 005**	
Mounting for chassis	0.25	**350 99 003**	
End cap for tube with Ø of 42 mm	0.01	**350 99 004**	

1

2

1 Fire extinguisher box

Size (height x width x depth)
630 x 310 x 220 mm

Material
HD-PE black

Execution
The lid (snap lock and locking split pin) is riveted to the box with 2 hinges. The hinges and rivets are made from stainless steel (V2A).
A fire extinguisher information sign made of self-adhesive film is included (as per DIN standard)

Article	Weight [kg]	Art. No.	Price [€]
Fire extinguisher box for 6 kg extinguisher	2.70	**462 05 000**	

Accessories

Article	Weight [kg]	Art. No.	Price [€]
Fixture for vehicle, for 6 kg fire extinguisher, incl. adjustable mounting straps	1.30	**462 05 004**	
Polycarbonate window 110 x 110 mm, welded in	0.10	**462 05 005**	
Fire extinguisher information sign (as per DIN) Self-adhesive film, 148 x 148 mm	0.01	**462 05 002**	

2 Fire extinguisher box with integrated mounting

Size (height x width x depth)
For 6 kg fire extinguisher: 650 x 300 x 250 mm
For 9/12 kg fire extinguisher: 760 x 300 x 250 mm

Material
PP / PE

Execution
The lid (red) is connected to the box by means of 3 plastic hinges, 2 clip locks, (2 nylon straps for 6 kg variant / 1 plastic strap for 9/12 kg variant) for securing the fire extinguisher, window in centre of cover, fire extinguisher sign (not DIN standard) enclosed loose.

Article	Weight [kg]	Art. No.	Price [€]
Fire extinguisher box for 6 kg extinguisher	3.00	**464 05 000**	
Fire extinguisher box for 9/12 kg extinguisher (Window not central)	4.10	**464 05 020**	

1

2

3

4

5

Security locks

Execution

Vibration-proof. When opening or closing the lock, press the key so that the bolt is lifted over the slot in the enclosure. The bolt engages automatically at the end of the 90° turn.

The hole pattern is the same for all locks, so they can be changed any time.

Scope of supply

Brass + zinc die-cast variant:

– Steel bolt (L = 40 mm), mounted

– Steel Counter nut, galvanised

Stainless steel variant:

– V2A bolt (L = 45 mm), mounted

– V2A counter nut

Actuation	Material	Art. No.	Price [€]
1 **Double bit with cover** (standard locking system at ROWEKO. Key can only be removed when locked.)	Brass	**411 90 300**	
	Stainless steel (V2A)	**411 90 305**	
2 **S-rotary two way bolts with offset latch** (for all platform boxes and storage boxes from year of manufacture 04/2013 with Ø 65 mm) lock cover)	Brass	**411 90 304**	
3 **Lever,** for tube container only	Zinc die-cast, chrome-plated+ polyamide	**411 90 390**	
4 **Square**, outside, 8 mm	Zinc die-cast, chrome-plated	**411 90 320**	
5 **Triangular**, outside, 8 mm	Zinc die-cast, chrome-plated	**411 90 330**	

Other designs on request.

1 Double bit with cover (standard), Size H = 20 mm
2 Double bit with cover (offset latch), Size H = 6 mm
3 Lever, only suitable for tube container
4 Square, outside, 8 mm
5 Triangular, outside, 8 mm

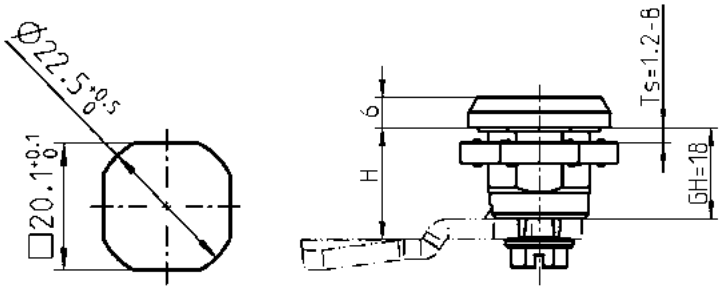

Security locks

Execution

Basic design – without protection against unintended opening. Key can be removed from the lock in any position. The hole pattern is the same for all locks, so they can be changed any time.

Scope of supply

Zinc die-cast + plastic variant:

– Steel bolt (L=40 mm) galvanised, mounted
– Steel Counter nut, galvanised

Stainless steel variant:

– V2A bolt (L= 45 mm), mounted
– V2A counter nut

Actuation	Material	Art. No.	Price [€]
1 **Double bit without cover**	Zinc die-cast, chrome-plated	**411 90 100**	
	Black polyamide	**411 90 101**	
	V2A stainless steel	**411 90 102**	
2 **Square,** outside, 8mm	Zinc die-cast, chrome-plated	**411 90 202**	
	V2A stainless steel	**411 90 203**	
3 **Square,** inside, 8mm	Zinc die-cast, chrome-plated	**411 90 200**	
4 **Triangular,** outside, 8mm	Zinc die-cast, chrome-plated	**411 90 501**	
	Black polyamide	**411 90 502**	
	V2A stainless steel	**411 90 503**	
5 **Gag**	Black polyamide	**411 90 900**	
6 **Cylinder lock** + 1 Key	Zinc-die cast	**411 90 400**	
separately locking		**411 90 405**	
7 **Nut for lock**	Steel, galvanised	**411 90 990**	

Other designs on request.

1 Double bit without cover
2 Square, outside, 8 mm
3 Square, inside, 8 mm
4 Triangular, outside, 8 mm
5 Gag
6 Cylinder lock
7 Nut for lock

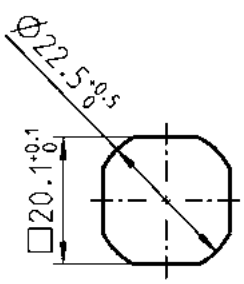

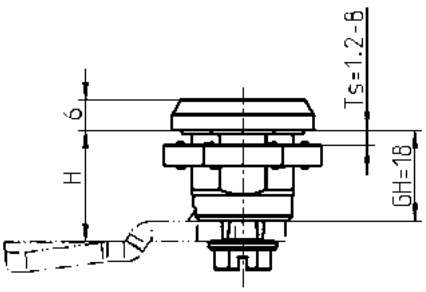

1

2

3

4

5

6

7

1

2

3

4

5

6

Keys

Variants

Actuation	Material	Art. No.	Price [€]
1 **Double bit**	Zinc-die cast	**411 91 300**	
2 **Double bit**	Polyamide	**411 91 301**	
3 **Square,** outside, 8 mm	Zinc-die cast	**411 91 200**	
4 **Square,** inside, 8 mm	Zinc-die cast	**411 91 201**	
Square, outside, 6 mm	Zinc-die cast	**411 91 203**	
5 **Triangular,** inside, 6.5 mm	Zinc-die cast	**411 91 600**	
6 **Triangular,** inside, 8 mm	Zinc-die cast	**411 91 601**	

Other designs on request.

1 Double bit
2 Double bit (PA)
3 Square, outside, 8 mm
4 Square, inside, 8 mm
5 Triangular, inside, 6.5 mm
6 Triangular, inside, 8 mm

Keys

Variants

Actuation	Material	Art. No.	Price [€]
7 **Triangular,** inside, 10 mm	Zinc-die cast	**411 91 602**	
8 **Crown**	Zinc-die cast	**411 91 500**	
9 **Cylinder** EK 333	Nickel silver	**411 91 400**	
10 **Bolt key** 100 mm	Galvanized steel	**411 91 202**	
11 **Key with slot** (Daimler)	Zinc-die cast	**411 91 501**	
12 **Deutsche Bahn Key**	Zinc-die cast	**411 91 206**	

Other designs on request.

7 Triangular, inside, 10 mm
8 Crown
9 Cylinder
10 Bolt key 100 mm
11 Key with slot (Daimler)
12 Deutsche Bahn Key

7

8

9

10

11

12

Wing knob

Execution
Vibration-proof when locked. The key can also be removed when the lock is open.

Scope of supply
– Flank guide for 3-point lock, steel (L = 45 mm) galvanised, not mounted
– 2 keys, counter nut

Actuation	Material	Art. No.	Price [€]
Wing knob lockable	Zinc-die cast	**411 90 410**	
Wing knob separately locking + 3 keys	Zinc-die cast	**411 90 420**	
Cylinder (for large lever)	Nickel silver	**411 91 410**	
Wing knob (without flank guide)	Zinc-die cast	**411 90 430**	
Key EK603 (replacement)	Zinc-die cast	**411 91 410**	

Wing knob (small)

Execution
Gag for locking and closing of:
– Document boxes
– Document rolls

Scope of supply
– 1 key, counter nut
– Steel guide (L = 24 mm) galvanised, mounted

Actuation	Material	Art. No.	Price [€]
Wing knob lockable	Zinc-die cast	**411 90 700**	
Cylinder (for small lever)	Nickel silver	**411 91 700**	
Locking lever	Zinc-die cast	**411 90 701**	
Key EK2233 (replacement)	Zinc-die cast	**411 91 700**	

1 Wing knob with key
2 Locking lever

3-point Lock for toolboxes

Scope of Supply
Comprising 2 rods (galvanised steel) with rolls, 2 guide rods (PA) with screw (V2A) and flank guide (zinc die) without lock/turning, not mounted.

Caution:
– Please state toolbox type and year of manufacture!
– Please order lock/turning bolt separately (p. 96-97)

Actuation	Art. No.	Price [€]
3-point lock	**499 30 000**	

Swing lever

Execution
Swing lever for 3-point locking on coupling cabinet up to year of manufacture 09/2009.

Scope of delivery
– 3 keys, mounting plate, without latch

Actuation	Material	Art. No.	Price [€]
Swing lever	Zinc-die cast	**411 90 800**	

BURG WÄCHTER Padlock

Execution
Brass body with plastic shell, lock made from stainless steel, 2 keys for toolboxes with:
– Circlip lock
– Snap lock

Scope of supply
– 2 keys

Actuation	Art. No.	Price [€]
Padlock simultaneous locking	**411 90 600**	
Padlock separately locking	**411 90 601**	

T-handle

Execution
Vibration-proof when locked. The key can also be removed when the lock is open.

Scope of delivery
– 2 keys, counternut
– Without latch

Actuation	Material	Art. No.	Price [€]
T-handle	Zinc-die cast	**411 90 901**	
Key EK143 (replacement)	Zinc-die cast	**411 91 901**	

Lock cover

Material
Black PE/Santoprene

Execution
For lids on toolboxes and storage boxes.
Protects the lock from the elements.

Scope of supply
VA rivet for installation

Article	Art. No.	Price [€]
Ø 38 mm	413 00 005	
Ø 65 mm	413 00 055	

1 Variant with Ø of 38 mm
2 Variant with Ø of 65 mm

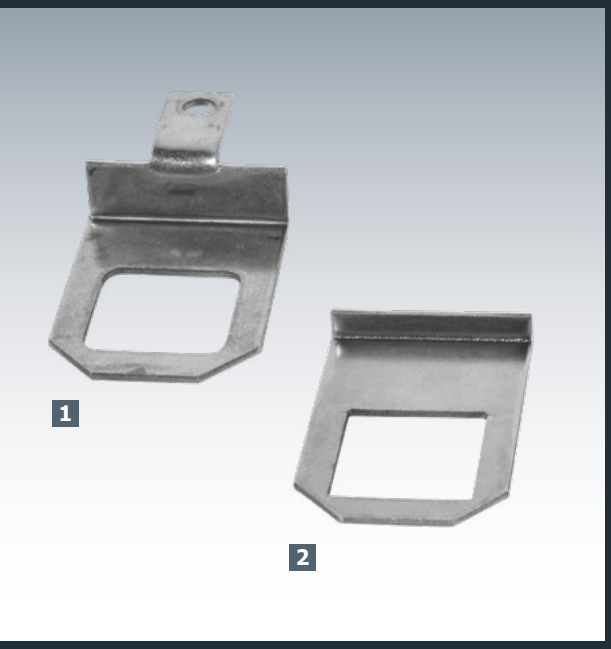

Lock protection

Material
Stainless steel

Execution
Prevents the locking cylinder from being over-stressed.

Article	Art. No.	Price [€]
Cranked lock protection	413 00 007	
Angulated lock protection	413 00 008	

1 For toolboxes with 2-point lock
2 For hose tube container

Dust cap

Material
Black PE

Execution
For clipping onto tube containers.
Protects the lock from the elements.

Article	Art. No.	Price [€]
Dust cap	413 00 012	

Angle for Padlock

Material
Stainless steel

Execution
For snap lock + circlip lock and storage boxes with removable lid, drill hole 9.0 mm

Article	Art. No.	Price [€]
Angle	**413 00 011**	

Locking split pin

Material
Steel, galvanised

Execution
For toolboxes, storage boxes and platform boxes with:
– Snap lock
– Circlip lock

Article	Art. No.	Price [€]
Locking split pin	**413 00 010**	

Hinges

Material
Stainless steel

Execution
For the mounting of flanges + doors/lids for tube containers, toolboxes, fire extinguisher boxes, document boxes etc.

Article	Art. No.	Price [€]
75 x 40 mm	**411 96 000**	
40 x 32 mm	**411 97 000**	

ROWEKO
KUNSTSTOFFVERARBEITUNG

Ventilation grille

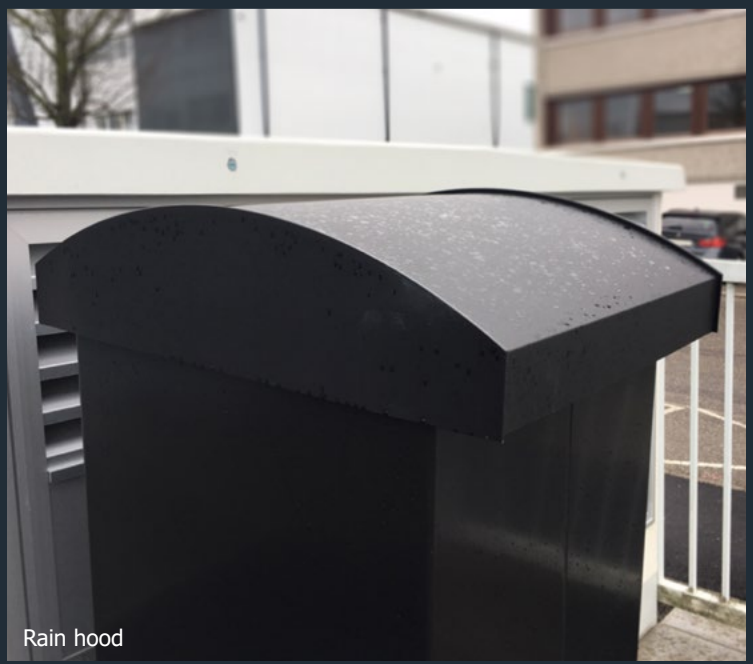
Rain hood

Small silo – For practical use everywhere

Clean storage, simple removal, flexible use - the sturdy small silo from ROWEKO provides optimum protection for dry bulk goods.

Whether in private households, in agriculture, sales or in trade and industry, the compact silo made of the light yet durable polymer material HD-PE is suitable for universal use and thus excellent for the fast dispensing of smaller quantities. The weather-proof, stainless tank is convincing for both indoor and outdoor applications and can be fitted with an additional rain hood for an outdoor set-up.

Details of the ROWEKO small silo:

- Monitoring of the filling level through two large viewing windows
- One ventilation grille with filter fleece each on the left and right
- Rapid product removal thanks to slide feed
- Variable outlet speed of up to 1 l/sec
- Large volume with light empty weight
- Simple erection and installation
- Easy filling through the funnel-shaped cover
- High material quality Made in Germany

Ideal for applications such as:

- Animal feed / concentrate – protects against mice
- Heating pellets – reduces dust development and keeps cellars tidy
- Grit/binding agent - on company premises, available immediately in hazardous areas
- Container filling - for filling bags e.g. 15 kg ornamental gravel

Design:

Dimensions	1775 x 630 x 630 mm
Weight	Total 48.90 kg
	Frame and bracket 21.10 kg
Volume	approx. 425 l
Max. load	600 kg
Material	HD-PE black, powder-coated steel

Article	Weight [kg]	Art. No.	Price [€]
Small silo incl. frame	48.90	**710 01 000**	

Accessories

Article	Weight [kg]	Art. No.	Price [€]
Rain hood	4.80	**710 01 050**	

Be convinced by the quality 'Made in Germany'.

www.kleinsilo.de

Instructions for mounting small silo

Instructions for mounting small silo rain hood

ROWEKO
KUNSTSTOFFVERARBEITUNG

Well parked – reliably protected

Pushing and pulling lawnmowers is a thing of the past. Today, robotic lawnmowers are taking over grassed areas and can be stored easily and safely there too. Even safe parking up is done fully automatically in the garden – in the mower's very own garage.

The ROWEKO robotic lawnmower garage is the optimum solution for the garden season, because it provides perfect protection against influences of the weather such as rain, storms and snow or soiling through leaves, branches or animal excretions when the lawnmower is not being used.

Extremely easy installation:
Park the robotic lawnmower, place the garage over it, anchor it to the ground, that's it!

Top material quality:
- Sturdy and easy-care acrylic glass (ABS/PMMA)
- High UV-stability and colour-fastness
- Weatherproof
- Temperature-resistant -30°C to +80°C
- No maintenance
- Fast and straightforward cleaning

Design:
Dimensions 920 x 770 x 420 mm
Passage Width: 600 mm
Height: 330 mm
Weight Total 5 kg
Material ABS / PMMA

Including fixing mandrels

Article	Weight [kg]	Art. No.	Price [€]
Robotic lawn-mower garage			
green	5.0	**720 01 000**	
white	5.0	**720 01 001**	
metallic grey	5.0	**720 01 002**	

www.maehrobotergarage.de

Instructions for mounting robotic lawnmower garage

Custom-made products –
ROWEKO provides customised plastic solutions

From the idea, to the prototype and right through to large-scale series production. Contact and talk to us about your ideas. We create individual parts for all conceivable applications in accordance with your wishes or drawings.

Housing produced from HD-PE for LED warning lamp on supporting foot for mobile concrete pump.

Protective housing produced from ASA for sprockets for rotatable working platforms.

Splash guard

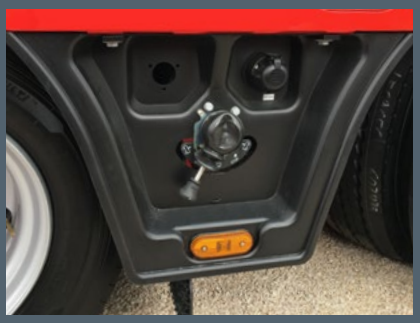

Operating window produced from HD-PE (frame) and PMMA (window) for compressors.

Special cover

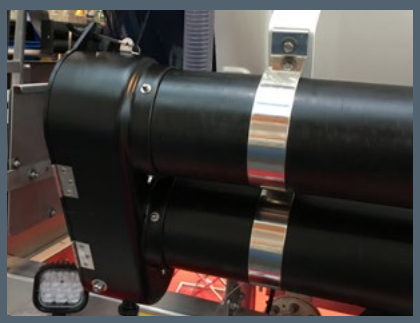

Various holders for side marker lights.

Protective grating made from HD-PE for coolers/radiators

Housing produced from HD-PE for flashing LED light on the support leg.

Thermoforming

Vacuum deep-drawing forms the focus of our production. Over 38 years of experience in the processing of thermoplastic plastics make us the perfect partner. We can produce parts on several machines up to a maximum trimming size of 2,500 x 1,250 mm and a depth of up to 600 mm.

Milling

The post-processing of the deep-drawing parts is carried out on modern 5-axis CNC milling machines with a maximum processing surface of 3,000 x 2,500 mm and a height of 800 mm.

Bending

With our fully automated bending machine, we can produce parts measuring up to 3,000 mm in length. The programme allows for up to 8 bendings to be carried out fully automatically.

Welding

Using various welding processes such as hot-gas, ultrasound, extruder or butt welding, bent plates or individual plastic parts can be connected to each other to form complete containers.

Mounting

Our mounting facilities are all equipped with the necessary tools in order to be able to immediately deliver ready-to-use components.

Good ideas made of plastic

We develop the better solutions

Take advantage of our construction expertise and discover plastic as an economical alternative for your technical parts.

You show us your component, your drawing or your sample, and we will show you how to do it more efficiently with plastic. We optimise the geometry, weight, design and functionality in order to firstly reduce your costs, and secondly achieve greater added value. Following the selection of the optimum plastic, we create the component using modern CAD systems and choose the production means that makes the most economic sense. Just some of the things that we can achieve for you with our plastic solutions:

- High impact strength
- UV resistance
- Flexibility at low temperatures
- Approved for use in the food industry
- Long service life, high quality

Do you have special requirements, small batch sizes, special logistical requests? That's no problem: Roweko stands for high-quality consultation and large flexibility in production. Contact us today and avail of the possibilities we can offer you.

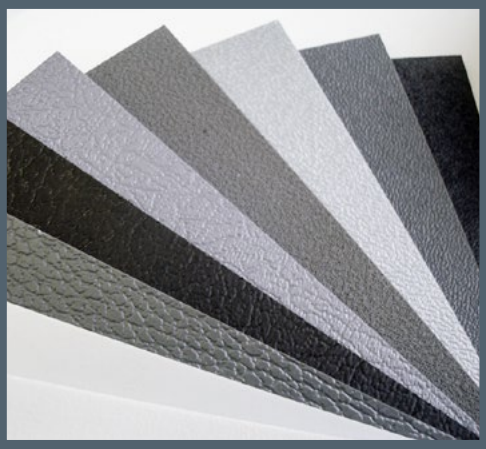

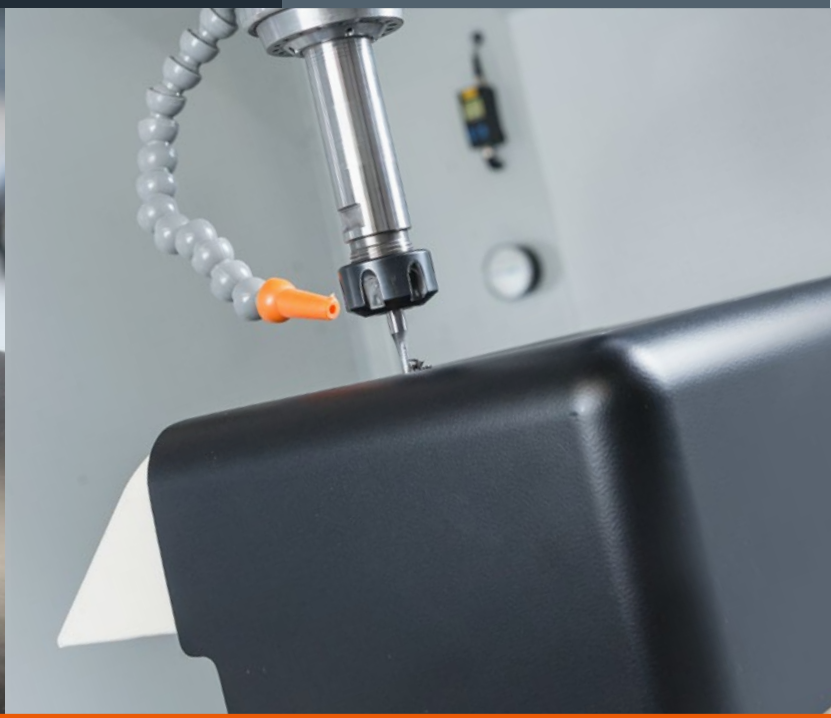

In 6 steps to the finished part

1 Plastics
We process a wide spectrum of thermoplastics and we will choose the ideal material for you. When choosing the material, besides physical characteristics, questions relating to the surface quality, as well as the colour play a role.

2 Construction
Based on the specifications you provide from the sample, drawing or an idea, we develop product solutions that are optimally suited to your purpose.

3 Tool construction
The production of the deep-drawing forms on CNC-controlled milling machines can be completed quickly using CAD/CAM programming.

4 Sampling
Especially when working on complex projects, we like to create installable initial samples.

5 Production
Our excellent machinery and equipment in combination with our experienced employees ensure high flexibility and smooth processes within production.

6 Logistics
Adapted to meet our customers' individual needs, we offer flexible logistics solutions.

PLEASE NOTE:

Tube container:
The tube containers are made to order from components which are generally in stock. Cancellations, subsequent changes, exchanges or returns are therefore not possible.

Delivery:
Minimum order value: 60.00 € / 125.00 €
(In Germany/abroad)
Extra charge for small quantities: 10.00 €
(for orders below the minimum order value)

Delivery:
By parcel service, next-day delivery or freight forwarding agency. If you require next-day delivery, please register by 12 noon at the latest.
(Please note: Delivery charges are considerably higher than by normal shipment)

Shipment:
Goods are packed as standard and included in the invoice at cost price. If you do not want any packaging, please confirm this in writing. This does, however, mean that the forwarding agent's insurance policy will not assume any liability for damages.

Receipt of goods:
Please inspect the goods upon receipt. Missing parts or damages must be confirmed in writing by the forwarding agent. Spare parts cannot be sent without this confirmation.

Returns:
It is only possible to return the goods if this has been arranged over the telephone or in writing in advance. The goods will not be accepted if this is not adhered to. If we do accept goods returns by way of exception then we will charge at least 15 % of the net value of the goods, or a minimum of 16.00 € to cover our costs.

Returns are not possible on hosetube boxes, transport tubes and custom-made products. The return delivery must be free and must see the goods be returned in a condition where they can be resold (1st choice).

Subject to technical modifications.
The dimensions and weights specified in the catalogue may vary due to production techniques.

Our general terms of sale and delivery apply.
The publication of this catalogue invalidates all previous price lists for the items contained herein.

§ 1 Scope and validity of terms

(1) All deliveries, services and products offered by the Seller take place exclusively on the basis of these terms and conditions. Thus these terms also apply to all future business relations, even where they are not again expressly agreed. These terms are considered to have been accepted once the goods or services have been received, at the latest. Purchaser's acknowledgements referring to his/her own terms and conditions are hereby rejected.

(2) All agreements, which are made between the Seller and the Purchaser for the purpose of executing this contract, are to be recorded in writing in this contract.

§ 2 Offer and conclusion of contract

(1) All offers made by the Seller are subject to confirmation and are non-binding; declarations of acceptance and all orders require the written confirmation (directly or by fax) of the Seller to become legally valid.

(2) Drawings, images, dimensions, weights and other performance data are only binding if they have been expressly agreed in writing.

(3) The Seller's sales personnel are not authorised to make verbal subsidiary agreements or to give verbal warranties that go beyond the contents of the written contract.

§ 3 Price

(1) Unless otherwise stated, the Seller is bound to the price offered in the quote for up to 30 days after the quote has been issued. The price quoted in the Seller's order confirmation does not include VAT as standard. Additional deliveries and services are calculated individually.

(2) All prices are ex-works prices. They do not include packaging costs, unless this is agreed in writing when the contract is formed. The packaging is provided by the Seller and is calculated at cost price. The packaging price is calculated taking all dealings into account; the price is calculated on the day of delivery.

§ 4 Schedule of goods delivered and services performed

(1) Delivery dates or deadlines that are agreed to be either binding or non-binding have to be made in writing.

(2) In the case of delays in deliveries or services performed due to force majeure or events that seriously hinder delivery by the Seller or make it impossible – these include strikes, lock-outs, official orders etc., which occur to the Seller's suppliers or sub-contractors – the Seller does not have to adhere to the dates and deadlines, even if they have been agreed as binding. These circumstances authorise the Seller to postpone the delivery or service provision for the duration of the impediment and for a reasonable lead-time, or to withdraw from the contract in full or in part due to the non-fulfilled section of the agreement.

(3) If the impediment lasts for longer than three months, after a measured grace period notification, the Purchaser is entitled to withdraw from the non-fulfilled part of the contract. If the delivery date is delayed or if the Seller is released from his/her obligation, then the Purchaser cannot derive any claims for damages from this. In the case of the circumstances described, the Seller can only claim relief if he/she informed the Purchaser immediately.

(4) If the Seller is responsible for not adhering to binding dates and deadlines or is in default, the Purchaser is liable to claim compensation for damage caused by culpable delay to the degree of 0.5 % for every complete week of delay, up to a total of 5 % of the total value of deliveries and service provision affected by the delay in our contractual relationship. Any additional claims are excluded, unless the delay is caused by gross negligence on the part of the Seller.

(5) The Seller is entitled to make part deliveries and to provide incomplete services at any time.

(6) Adherence to the delivery and service provision obligations of the Seller presupposes the timely and proper fulfilment of the Purchaser's obligations.

(7) In the event that the Purchaser is in default of acceptance, the Seller is entitled to claim incidental damages; as the default of acceptance takes effect, the risk of accidental damage and theft is transferred to the Purchaser.

§ 5 Passing of risk

The risk is transferred to the Purchaser as soon as the shipment has been given to the person executing the transportation, or, in the case of posting, when it has left the Seller's warehouse. If shipment is rendered impossible for reasons beyond the Seller's control, the risk in shipment will pass to the Purchaser upon notification that the goods are ready to dispatch.

§ 6 Warranty

(1) The Seller guarantees that the products are free from manufacturing and material defects. The period of warranty comprises six months and starts on the delivery date. No guarantee can be assumed for bought-in products (e.g. locking devices).

(2) If operating or maintenance instructions, or assembly instructions, provided by the Seller are not adhered to; if modifications are made to the products; if parts are exchanged or expendable materials are used that do not fulfil the original specifications, then every warranty claim becomes inapplicable if the Purchaser does not refute a respective substantiated claim that one of these circumstances led to the fault.

(3) The Purchaser must inform the Seller's customer service department immediately in writing if there are defects upon receipt of the goods. The Seller must be immediately informed in writing of defects that could not have been discovered through rigorous inspection.

(4) In the case of the Purchaser informing the Seller that the products do not fulfil the warranty, the Seller will demand, if he/she so chooses and at their own cost, that:

a) The damaged part or device is sent to be repaired and then returned to the Seller;

b) The Purchaser keeps the damaged part or device and a service technician will be sent by the Seller to the Purchaser to repair the items. If the Purchaser demands that the warranty works be completed at a specific location, the Seller can satisfy this requirement, whereupon parts under warranty are not charged, whereas working hours and travel expenses are to be paid to the Seller at the standard rate.

(5) If the rectification of defects fails after a certain period, the Purchaser can choose between demanding a reduction in payment and revoking the contract.

(6) Liability for normal wear and tear is excluded.

(7) Liability claims against the Seller are only possible by the Purchaser and cannot be ceded to third parties.

(8) The aforementioned paragraphs contain conclusive guarantee provisions for the products and rule out any other guarantee claims whatsoever. This does not apply to claims of indemnity from warranted characteristics, which are intended to safeguard the Purchaser from the risk of consequential damages.

§ 7 Spare parts

The Seller will supply spare parts for these products at the applicable spare part prices for a period of three years after initial delivery.

§ 8 Title retention

(1) Prior to the satisfaction of all claims (including all current balance claims), which the Seller has vis-à-vis the Purchaser, either now or in the future for course in law, the Seller is granted the following securities from the Purchaser, which he/she shall release upon demand at his/her discretion, provided that the value exceeds the claims by more than 20 % on a sustained basis.

(2) The goods remain the property of the Seller; processing or reshaping will always be performed for the Seller as manufacturer, but without any obligation. If (joint)ownership by the Seller expires as a result of the goods' installation then it will be agreed that the (joint) ownership of the Purchaser of the unitary object shall pass onto the Seller in proportion to its value (amount of invoice). The Purchaser shall hold the (joint)ownership of the Seller at no charge. Goods for which the Seller has (joint)ownership will hereinafter be referred to as goods subject to reservation of title.

(3) The Purchaser is entitled to process and sell the goods subject to reservation of title in proper trading, so long as he/she is not in default. Pledges or transfer by way of security are not admissible. By way of security, the Purchaser already now assigns the claims (including all current balance claims) relating to the goods subject to reservation of title, which arise from selling the goods on or from a different legal reason (insurance, unlawful act), to their full extent. The Seller grants the Purchaser revocable authorisation to collect, in his own name, debts transferred to the Seller on the Seller's account. This authorisation for collection can only be revoked in cases where the Purchaser does not meet his/her payment obligations in the proper form.

(4) In cases where third parties access the goods subject to reservation of title, particularly in the case of distraint, the Purchaser will point to the ownership of the Seller and inform the Seller immediately so that the Seller can implement his/her right of ownership. If the third party is not in a position to reimburse the judicial or extrajudicial costs arising from this situation the Purchaser is liable.

(5) In the case of the Purchaser violating the contract – in particular delayed payments – the Seller is authorised to take back the goods subject to reservation of title or to demand the transfer of the right to possession of the Purchaser to a third party. The Seller taking back or pledging the goods does not constitute a withdrawal from contract.

§ 9 Payment

(1) Unless otherwise agreed, the Seller's invoices are to be paid net within 30 days of the invoice date. The Seller is entitled, despite contrary stipulations of the Purchaser, to offset payments first against older debts, and will inform the Purchaser about the type of the offset method. If costs and interest have already been accrued, the Seller is authorised to offset the payment first against the costs, then against the interest and finally against the principal service.

(2) A payment is considered complete when the Seller has access to the funds. In the case of cheques, the payment is not completed until the cheque has been paid in.

(3) In the event of any delay in payment, interest on arrears at a rate of 8 % above the base interest rate shall be payable without prejudice to the right to assert any further damages.

(4) If the Seller is made aware of circumstances that bring the financial standing of the Purchaser into question, in particular when a cheque bounces or if payments are suspended, or if the Seller is made aware of other circumstances that bring the financial standing of the Purchaser into question, even if cheques have been accepted, the Seller is entitled to declare that the remaining debt be due for payment. Furthermore, in this case the Seller is entitled to demand advance payments or collateral security.

(5) The Purchaser is only entitled to offset, withhold or reduce payments, even in cases of notices of defects or counter-claims being made valid, where the counter-claims have been established as final and absolute. However, the Purchaser is entitled to withhold payments on the basis of counter-claims from the same contractual relationship.

§ 10 Product revisions

The Seller reserves the right to make product revisions at any time; the Seller is, however, not obligated to make these types of modifications on products that have already been supplied.

§ 11 Patents

(1) The Seller indemnifies the Purchaser and their customers from claims regarding infringements of copyrights, trademarks or patents, unless the draft of the item supplied was drawn up by the Purchaser. The indemnity obligation of the Seller is limited in amount to the foreseeable damages. An additional prerequisite for the indemnification is that the Seller is left to conduct legal proceedings, and that the claimed infringement is solely apportioned to the construction of the item delivered by the Seller, and is not connected to usage with other products.

(2) The Seller has the optional right of liberating themselves from the obligations cited in paragraph 1 by either

a) Procuring the required licences relating to the alleged violated patents or

b) Providing the Purchaser with modified items or parts, which in the case of an exchange with the infringing items or its parts, remedy the infringement claim relating to the delivered items

§ 12 Non-disclosure

Unless otherwise expressly agreed in writing, the information passed on to the Seller in connection with orders is not confidential.

§ 13 Limitation of liability

Claims of indemnity from positive breach of obligation, from debts upon conclusion of contract and from unauthorised acts are excluded both against the Seller and against their subcontractors or vicarious agents, unless the damage was caused deliberately or as a result of gross negligence. This also applies to claims of indemnity due to non-fulfilment, although only insofar as the replacement of indirect or consequential damages is demanded, unless the liability is based on an assurance designed to protect the Purchaser from the risk of such damages. Every liability is limited to damages foreseeable at the conclusion of contract. In each case, the Seller's liability as set out in the Product Liability Act and other claims from manufacturers liability remains unaffected.

§ 14 Applicable law, place of jurisdiction, partial invalidity

(1) The law of the Federal Republic of Germany applies to these terms and conditions and all legal relations between the Seller and the Purchaser. The application of European Union and international law is excluded.

(2) If the Purchaser is considered to be a business person („Vollkaufmann") as stipulated by the German Commercial Code or a legal entity or separate estate under public law („juristische Person des öffentlichen Rechts" or „öffentlich-rechtliches Sondervermögen") the exclusive place of jurisdiction for all disputes resulting directly from this agreement shall be Lauffen.

(3) In the event of one clause of these terms and conditions, or a provision from an other agreement, being or becoming void, the validity of all of the other provisions or agreements shall not be affected.

MADE IN GERMANY

ROWEKO
KUNSTSTOFFVERARBEITUNG

ROWEKO Kunststoffverarbeitung GmbH

Industriegebiet „Vorderes Burgfeld“
Hoher Steg 5 · D-74348 Lauffen a. N.
Tel.: +49 (0) 7133 / 22 88 08-0 · Fax: +49 (0) 7133 / 22 88 08 44
info@roweko.de · www.roweko.de